Ammonia Volatilization from Constructed Wetlands that Treat Swine Wastewater

M. E. Poach, P. G. Hunt, E. J. Sadler, T. A. Matheny, M. H. Johnson, K. C. Stone, F. J. Humenik, J. M. Rice

Abstract. *Increasingly, large–scale animal production occurs in confinement where large per–unit–area quantities of waste are generated. With the increased scale of production, new environment–friendly technologies are needed to deal with the waste. Constructed wetlands are considered an alternative treatment, but it is not known if volatilization of free ammonia (NH_3) governs nitrogen removal in these systems. The objective of this research was to quantify the NH_3 volatilization from constructed wetlands that treat swine wastewater. In May and July of 2000, a specially designed enclosure was used to measure NH_3 volatilization from constructed wetlands receiving swine wastewater. Laboratory and field calibration tests indicated that the enclosure was effective at measuring NH_3 volatilization. Wetland tests indicated that NH_3 volatilization was occurring. From average hourly rates, it was estimated that 7% to 16% of the nitrogen load to the wetlands was removed through NH_3 volatilization. Although NH_3 losses should not be ignored, results indicated that NH_3 volatilization was not responsible for removing the majority of nitrogen from the swine wastewater.*

Keywords. *Ammonia volatilization, Constructed wetlands, Swine wastewater treatment, Lagoon alternative.*

The treatment of waste generated by concentrated animal operations is of increasing public concern throughout the U.S. In North Carolina, this concern is exacerbated by the fact that improper storage and handling of waste has impacted water quality (Mallin, 2000). Presently, waste generated by concentrated swine operations is stored in and partially treated by anaerobic lagoons. Lagoons are kept from overflowing by spraying the excess liquid waste on cover crops. These wastes are high in the nutrients nitrogen and phosphorus; and their overapplication can pollute surface and groundwater due to runoff and leaching from the spray fields (Stone et al., 1998). Pollution can also result from lagoon failures (Huffman and Westerman, 1995). Volatilization of free ammonia (NH_3) from anaerobic lagoons and spray fields may also contribute to excess nutrients in the watershed through dry and wet deposition (Asman, 1994). To reduce the nutrient load to the environment from animal waste, alternative forms of wastewater treatment are being examined. One promising treatment option is the use of constructed wetlands.

Constructed wetlands are an operationally passive form of wastewater treatment (Hunt and Poach, 2002; Kadlec and Knight, 1996). Initial studies have shown that constructed wetlands can effectively treat animal wastewater (Payne and Knight, 1997). This is especially true for nitrogen removal. Constructed wetlands remove nitrogen from wastewater by sedimentation, plant uptake, adsorption, nitrification–denitrification, microbial assimilation, and NH_3 volatilization (Brix, 1993; Johnston, 1991). Wetlands constructed to treat swine wastewater removed from 70% to 95% of total nitrogen when loaded at rates between 3 and 36 kg N ha^{-1} day^{-1} (Hunt et al., 1999).

At high loading rates, nitrification–denitrification is considered the major mechanism behind the nitrogen loss, but recent concerns have been expressed that NH_3 volatilization may govern nitrogen loss from wetlands that treat wastewater with ammonia concentrations greater than 20 mg L^{-1} (Payne and Knight, 1997). (Note: In this article, unless otherwise indicated, the term "ammonia" denotes aqueous ammonia and ammonium in the aggregate.)

Generally, in wetlands that treat animal wastewater, BOD is greater than 100 mg L^{-1}, denitrification is nitrate limited, and oxygen content of the sediment is less than 2 mg L^{-1} (Kadlec and Knight, 1996; Knight et al., 2000). In these situations, it appears that the oxygen transfer to the wastewater may not be high enough to nitrify the ammonia assumed lost through nitrification–denitrification. If nitrification–denitrification is low in these wetlands, then NH_3 volatilization could explain the loss of nitrogen. However, NH_3 volatilization is thought to be a minor loss mechanism in constructed wetlands with non–alkaline waters and soils (Brix, 1993). This assumption is based on the fact that <1% of ammonia is present as NH_3 at pH values <8 (Kadlec and Knight, 1996). But >1% is available for volatilization because, in an open system, ammonium (NH_4^+) will

Article was submitted for review in March 2001; approved for publication by the Soil & Water Division of ASAE in January 2002.

Mention of trade name, proprietary product, or vendor is for information only and does not constitute a guarantee or warranty of the product by U.S. Department of Agriculture and does not imply its approval to the exclusion of other products or vendors that may also be suitable.

The authors are **Matthew E. Poach**, Soil Scientist, **Patrick G. Hunt, ASAE Member**, Soil Scientist/Research Leader, **E. John Sadler, ASAE Member**, Soil Scientist, **Terry A. Matheny**, Soil Scientist, **Melvin H. Johnson**, Agricultural Engineer, and **Kenneth C. Stone, ASAE Member Engineer**, Agricultural Engineer, USDA–ARS, Coastal Plains Soil, Water, and Plant Research Center, Florence, South Carolina; and **Frank J. Humenik, ASAE Fellow Engineer**, Professor; and **J. Mark Rice, ASAE Member Engineer**, Water Quality Technician, Biological and Agricultural Engineering Department, North Carolina State University, Raleigh, North Carolina. **Corresponding author:** Matthew E. Poach, USDA–ARS, Coastal Plains Soil, Water and Plant Research Center, 2611 West Lucas Street, Florence, SC 29501–1241, phone: 843–669–5203, ext. 113; fax: 843–669–6970; e–mail: poach@florence.ars.usda.gov.

continuously convert to NH_3 to replace the NH_3 lost to volatilization. If NH_3 volatilization is a significant mechanism for nitrogen removal from constructed wetlands that treat animal wastewater, then pre–wetland nitrification of the wastewater may be necessary to prevent this volatilization and its resulting pollution. However, pre–wetland nitrification adds to construction and maintenance costs of the wetland treatment system. Therefore, it is important to measure the amount of NH_3 volatilized from treatment wetlands to determine if pre–wetland nitrification is necessary.

In the field, NH_3 volatilization is commonly measured using three methods: isotopic methods, micrometeorological methods, and enclosure methods (Harper, 1988). The isotopic method determines the total nitrogen loss from a system, but additional studies must be done to separate how much of that total loss results from volatilization, denitrification, and leaching. Isotopic methods are misleading if net NH_3 transport is not evaluated (Harper and Sharpe, 1998). Thus, the isotopic method is expensive and labor intensive. Micrometeorological techniques (eddy correlation, gradient diffusion, and mass balance) involve measuring the vertical flux density of gaseous ammonia above a study plot. These methods require the experimental area to be large (fetch > 100 m for eddy correlation and gradient diffusion, fetch > 25 m for mass balance), the wind profile to be at equilibrium, the exchange surface to be uniform, and either the wind field to be stationary or the site to have a uniform fetch (Denmead, 1983). Generally, these conditions do not exist at constructed wetland sites. The enclosure method is a viable alternative for such experimental areas.

Enclosures generally belong to two groups, steady state and non–steady state (Livingston and Hutchinson, 1995). Non–steady–state enclosures are closed to the outside atmosphere and may or may not have air circulation inside. Non–steady–state enclosures are considered inappropriate for measuring NH_3 volatilization because test conditions can differ significantly from ambient conditions, and NH_3 volatilization is affected by temperature, humidity, pressure, wind speed, and atmospheric NH_3 concentration (Harper, 1988; Harper et al., 2000; Hutchinson and Livingston, 1993). Enclosures used to measure NH_3 volatilization are generally steady–state enclosures with one or two ends open to the outside atmosphere and forced airflow (Lockyer, 1984; Vallis et al., 1982).

This research was part of a larger project investigating the ability of constructed wetlands to treat swine wastewater. The objective of this research was to quantify, using a steady–state enclosure, the NH_3 volatilization from constructed wetlands that treat swine wastewater. This research will provide insight into nitrogen cycling in constructed wetlands that treat animal waste.

Materials and Methods

Study Location

Experiments were conducted in May and July of 2000 on wetlands constructed at a swine farm in Duplin County, North Carolina (35° 2′ 30″ N, 77° 57′ 30″ W). The farm includes a 2,600–pig nursery (average weight = 13 kg). Waste generated by the pigs is flushed from the houses to a single–stage anaerobic lagoon. The average liquid volume of the lagoon was 4,100 m^3 with a residence time of 120 days. During the experiments, the lagoon liquid contained an average of 370, 81, 188, and 875 mg L^{-1} of total Kjeldahl N (>82% ammonia–N), total P, BOD, and COD, respectively.

Constructed Wetland Design

The constructed wetland system consisted of two parallel wetland units (fig. 1). Each wetland unit consisted of two 3.6–m × 33.5–m cells connected in series. The cells were built by soil excavation in 1992 (Hunt et al., 1994). Once the cells were excavated, their bottoms were graded to a 0.2% slope and sealed by a compacted clay liner. The clay liner was covered with a 0.25–m layer of loamy sand soil. *Scirpus* sp. and *Juncus effusus* were planted in wetland unit 1, while *Typha* sp. and *Sparganium americanum* were planted in wetland unit 2. Since then, *Scirpus* and *Typha* have come to dominate the wetlands cells where they were planted.

During the months that the experiments were conducted, two different system designs were used to load wastewater to the wetland cells. During the May experiments, wastewater was diluted with freshwater in a mix tank before it was applied to the wetland cells by two peristaltic pumps. The flow rate of the pumps was originally set to load nitrogen at an approximate rate of 25 kg N ha^{-1} day^{-1}, but loading was extremely variable because of fluctuations in ammonia concentration in the mix tank. These fluctuations occurred due to a malfunction in the control of the fresh/waste mix ratio. To ensure more reliable control of the N loading rate, freshwater and wastewater were applied separately to the wetlands. This design was in place during the July experiments. The fresh water used to dilute the lagoon wastewater contributed negligible amounts of N and P (total N < 0.8 mg L^{-1} and total P < 0.04 mg L^{-1}). The effluent from each wetland unit was recycled back to the lagoon.

Wastewater flows were recorded mechanically. Inflows to the first and second cells were measured using tipping buckets equipped with reed switches and electronic counters. Outflows from the second cells were measured by use of V–notch weirs with ultrasonic depth detectors (Control Electronics, Morgantown, Pa.) and pressure transducers (Druck, Inc., PDCR 950, New Fairfield, Conn.). During the

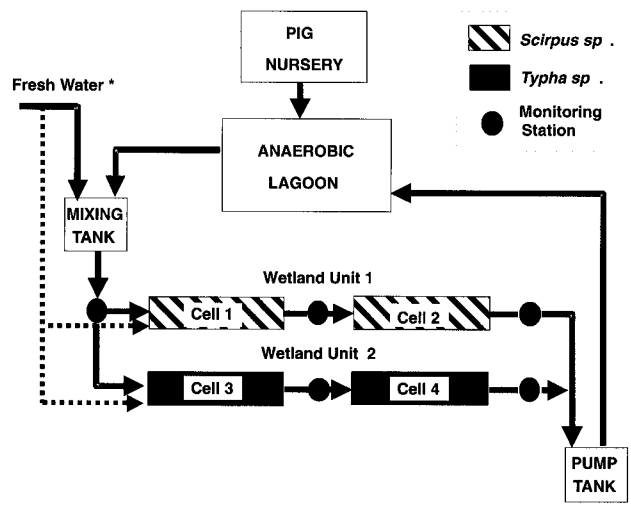

Figure 1. Schematic of constructed wetlands receiving swine wastewater from an anaerobic storage lagoon (* dashed–line arrows denote freshwater flow during July tests).

July experiments, freshwater inflow was measured with inline flowmeters (Neptune T–10). At each monitoring station (fig. 1), wastewater was collected daily and composited into weekly samples using automated samplers (ISCO 3700, Lincoln, Nebr.). Composite samples were collected weekly and refrigerated for later analysis.

Wetland nutrient removal efficiency was determined on a mass basis by the following equation:

$$Eff = \left(\frac{[(F_i \times C_i) - (F_o \times C_o)]}{(F_i \times C_i)} \right) \times 100 \qquad (1)$$

where

Eff = percent nutrient removal
F_i = inlet wastewater flow (L day^{-1})
F_o = outlet wastewater flow (L day^{-1})
C_i = inlet nutrient concentration (mg L^{-1})
C_o = outlet nutrient concentration (mg L^{-1}).

Enclosure Construction

Most steady–state enclosures described in the literature cover a small area (1 m^2) and are approximately 45 cm in height. These enclosures are designed to measure NH_3 volatilization from small, grass–covered plots and therefore are not suitable for measuring NH_3 volatilization from constructed wetlands containing tall plants. For this study, a larger enclosure was constructed and used to measure NH_3 volatilization (fig. 2). The enclosure consisted of two major components: a tunnel–shaped working section that covered a 4–m^2 experimental plot, and two flow–conditioning sections that were attached to the open ends of the working section.

The working section (4 × 1 × 2.5 m, L×W×H) was constructed to span a wetland cell and to encompass the wetland plants in the plot (figs. 2 and 3). It was necessary to encompass the plants with the enclosure because NH_3 gas may be emitted or absorbed by wetland plants. The width of the working section was chosen to keep material and weight to a minimum without affecting enclosure stability. Because the enclosure was to be moved to different cells within each site, it was constructed to be lightweight and rigid. The frame was constructed with 1–inch aluminum pipe (sch. 40) and stabilized with 3/32–inch stainless steel cable. Polyethylene sheeting was used to cover the frame. To secure the plastic to the frame, it was sandwiched between a two–piece clamp, the base piece of which was permanently attached to the frame. A dolly–type system was used to raise and lower the enclosure and to move it between plots.

Two variable–speed fans were used to generate airflow through the enclosure (fig. 2). They were mounted at each end of the enclosure to allow for control of pressure inside the enclosure, which could affect the rate of NH_3 volatilization. During a test, contraction or expansion of the plastic surrounding the frame indicated overpressure or underpressure in the enclosure. Adjusting individual fan speed so the plastic sides were slack minimized pressure differences within and without the enclosure. Flow straightening was accomplished with a set of vertical and horizontal vanes built into the inlet flow conditioning section. The wind speed generated by the fans was measured with two anemometers: one located at a 2–m height at the center of the enclosure, and one located after the outlet fan (fig. 2). Airflow through the tunnel was determined by recording the time it took to fill a long plastic sock of known volume with the outflow air. Airflow was then correlated with the readings of the outflow anemometer. The readings of the outflow anemometer were used to determine airflow during field tests.

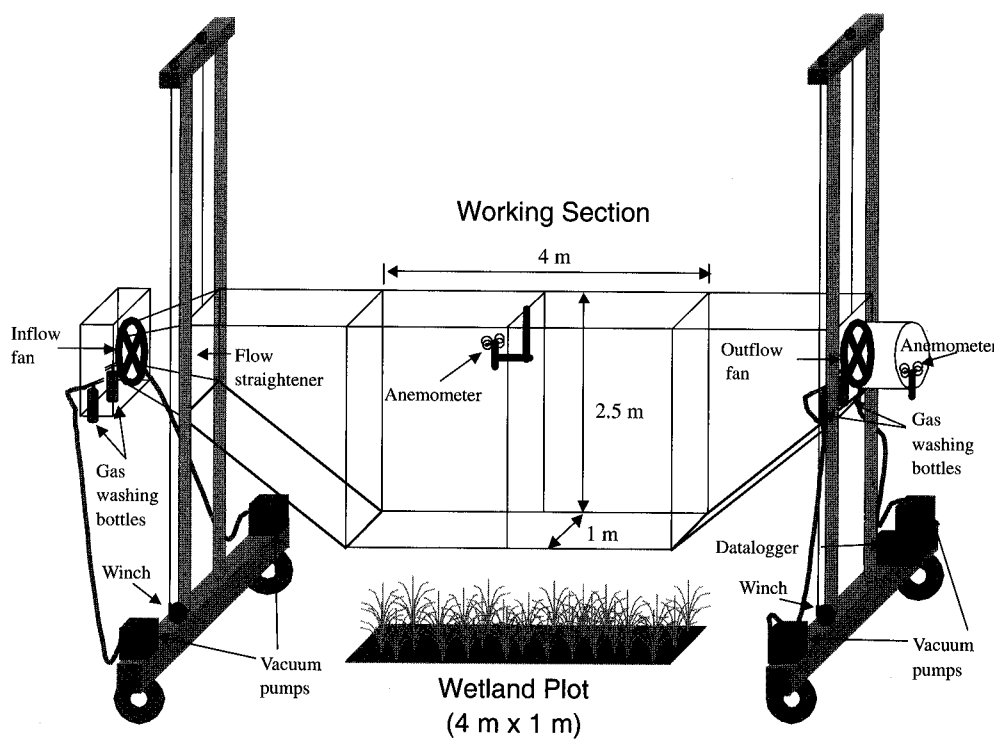

Figure 2. Diagram of enclosure showing dimensions and component placement.

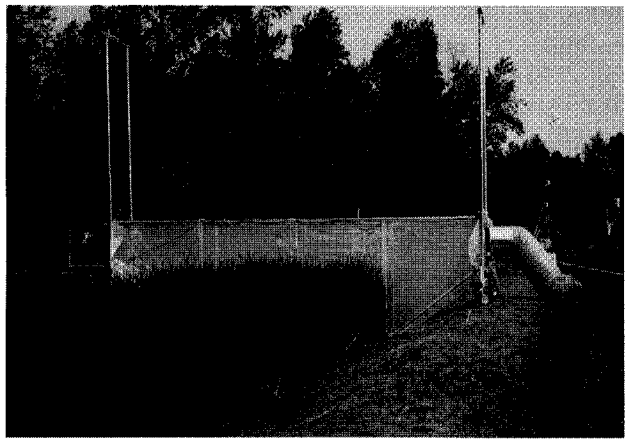

Figure 3. Photograph of enclosure during a test on a wetland plot.

Air temperature was measured using thermocouples placed at the inlet and outlet of the enclosure. An additional thermocouple was attached to the lower part of the enclosure's frame to measure the water temperature in the plot. During each test, temperature and wind-speed were recorded continually with a datalogger (CR23, Campbell Scientific, Inc., Logan, Utah).

NH_3 Measurement

Atmospheric NH_3 was captured using a gas-washing-bottle technique (Harper et al., 2000; Vallis et al., 1982). Bench tests of a closed system indicated that the gas-washing bottles collected 100% of the NH_3 passed through them (table 1). To collect NH_3 in air entering and leaving the enclosure, a set of two bottle mounts was attached directly before the inlet and the outlet of the enclosure (fig. 2). During lab and field tests, vacuum pumps were used to continuously pull a sample of air through the bottles at a constant rate of 6-L min^{-1}. To prepare bottles for NH_3 collection, they were rinsed once with 0.2 M H_2SO_4 and then were filled with 80 mL of 0.2 M H_2SO_4. After a test, the air inlet tube of each bottle was rinsed with 10 mL of 0.2 M H_2SO_4, and then the volume of each was brought to 100 mL. Samples from each bottle were stored on ice and analyzed at the laboratory.

Laboratory Calibration

Four tests were conducted in the laboratory to determine the efficiency of our procedure for determining NH_3 volatilization. To prepare for each test, gas-washing bottles were placed in their mounts at the inlet and outlet of the enclosure, and pans containing a 1-L ammonium sulfate solution were placed inside the enclosure. Ammonia was volatilized from the pans by adding 100 mL of 1 N sodium hydroxide. The fans were then started and adjusted to equilibrate pressure inside the enclosure. Vacuum pumps were turned on at the same time as the fans. After two hours, 100 mL of 1 N sulfuric acid was added to the pans to neutralize the alkali and to stop NH_3 volatilization. Fans and vacuum pumps were run for an additional two minutes to ensure that all NH_3 gas was evacuated from the enclosure. The amount of NH_3-N volatilized was equal to the difference in NH_4-N content of the pans before and after each test.

Table 1. Efficiency of gas-washing bottles to recover gaseous ammonia evolved in a closed, bench-scale system.

Test	NH_3-N Evolved (mg)	NH_3-N Trapped (mg)	Trap Efficiency[a] (%)
1	159	163	103
2	163	163	100
3	183	181	99
4	132	137	104
		Average Efficiency =	101 ±2

[a] Efficiency = NH_3-N trapped / NH_3-N evolved × 100.

Trapping efficiency was determined by the following equation:

$$Eff = \left[\frac{(T_a \times F_d)}{d_P}\right] \div 10 \qquad (2)$$

where

Eff = ammonia trapping efficiency of the enclosure

T_a = amount of NH_3-N captured by outlet gas-washing bottles (μg)

F_d = airflow through enclosure (in L min^{-1}) divided by the air sampling rate of 6 L min^{-1}

d_P = difference in the amount of NH_4-N in pans between the start and the end of a test (mg).

During four calibration tests, the amount of NH_3-N volatilized from the pans ranged from 101 to 129 mg, while the amount of NH_3-N captured by the bottles ranged from 27 to 30 μg (table 2). The trapping efficiency ranged from 91% to 103% with an average efficiency of 98%. Because this mean value is not significantly different from 100%, the trapping efficiency of the enclosure was assumed to be 100% for lab and field tests.

Table 2. Trapping efficiency of the enclosure during laboratory tests as determined from the ammonia evolved from pans in the enclosure and recovered by gas-washing bottles.

NH_3-N Evolved, Actual[a] (mg)	NH_3-N Trapped (μg)	Airflow Ratio (enclosure[b] / trap[c])	NH_3-N Evolved, Estimated[d] (mg)	Efficiency[e] (%)
129	29.9	3930	118	91
114	29.0	3930	114	100
106	27.0	3875	105	99
101	26.6	3923	104	103
			Average Efficiency =	98 ±5

[a] NH_3-N evolved from pans placed in enclosure.
[b] Airflow through enclosure.
[c] Air sampling rate of 6 L min^{-1}.
[d] Estimate determined as follows: NH_3-N evolved = NH_3-N trapped / 1000 × Airflow ratio.
[e] Efficiency = estimated NH_3-N evolved / actual NH_3-N evolved × 100.

Field Calibration

To determine if the inside of the enclosure acts as a sink or a source of NH_3, control tests were conducted at the constructed wetland site. Prior to each test, the enclosure was placed on a plastic sheet with its plastic sides rolled up to reduce climate changes in the enclosure. Gas–washing bottles were mounted at the inlet and outlet, and the sides of the enclosure were dropped and locked into place. The fans were turned on, adjusted to equilibrate pressure inside the enclosure, and run for two minutes to ensure that a complete volume change occurred inside the tunnel. Vacuum pumps were then turned on to begin NH_3 sampling. Tests of 2–hour duration were conducted at multiple locations adjacent to the wetland cells.

During each control test, the amount of NH_3–N collected by the inlet gas–washing bottles was not significantly different ($p = 0.05$) from the amount collected by the outlet gas–washing bottles (table 3). These results indicated that, during a test, the enclosure would be neither a sink nor a source of NH_3.

Wetland Tests

Ammonia volatilization was measured at two locations in each of the four wetland cells in both May and July of 2000.

Table 3. Difference in ammonia (NH_3–N, in μg) captured at the enclosure inlet and outlet during field calibration tests.

Test	In	Out	Out – In
1	6.1	5.6	–0.5[a]
2	2.9	2.0	–0.9[a]
3	2.3	1.9	–0.4[a]
4	4.5	6.4	1.9[a]
5	1.3	0.9	–0.4[a]

[a] Not significantly different from zero ($LSD_{0.05} = 3.4$).

In May, six tests were conducted at one location during a 21–hour period to assess diurnal effects. Tests were conducted in the same manner as the field calibration tests, except the plot was not covered with a plastic sheet. The duration of these tests ranged from one to two hours.

During each wetland test, wastewater grab samples were collected from and pH measured in an area next to the study plot. Enclosure location and settings and environmental conditions for each wetland test are summarized in tables 4 and 5.

NH_3 volatilization in mg N m^{-2} $hour^{-1}$ was determined using the following equation:

Table 4. Parameters for ammonia volatilization tests conducted on constructed wetlands in Duplin County, North Carolina, during May of 2000.

Cell	Test	Distance from Inlet (m)	Start Time	Test Duration (hours)	Waste $NH_{3,4}$–N (mg L^{-1})	Plot Airspeed[a] (m s^{-1})	Airflow (L min^{-1})	pH	Temperature (°C) Water	Air In	Air Out
Scirpus											
1	1	12	09:40	2.0	173	1.3	29791	7.1	21.2	27.0	28.2
	2	12	11:50	1.9	173	1.6	38826	7.1	21.8	28.3	31.1
	3	12	13:50	2.0	173	1.5	35550	7.1	22.6	28.2	31.1
	4	12	15:55	1.9	173	1.6	33653	7.1	23.3	26.0	27.4
	5	12	20:30	2.0	173	1.2	24822	7.1	23.3	21.8	22.2
	6	12	04:45	2.0	173	0.9	20379	7.1	22.3	20.0	20.1
	7	24	13:35	2.0	152	1.1	36012	7.1	23.8	31.4	34.5
2	8	48	11:10	1.3	99	1.4	37235	7.0	23.7	27.7	28.9
	9	60	11:10	2.0	73	0.8	33886	7.2	30.1	32.9	36.7
Typha											
1	10	12	16:30	2.0	117	1.2	29553	7.1	23.9	26.4	27.4
	11	24	16:10	2.0	223	0.7	28542	7.0	24.2	30.1	33.1
2	12	48	08:30	2.0	113	1.4	30413	7.3	20.8	25.1	25.6
	13	60	08:30	2.0	102	0.6	41340	7.1	22.1	28.9	30.5

[a] Airspeed measured by the anemometer located at the center of the enclosure, 2 meters above the plot surface.

Table 5. Parameters for ammonia volatilization tests conducted on constructed wetlands in Duplin County, North Carolina, during July of 2000.

Cell	Test	Distance from Inlet (m)	Start Time	Test Duration (hours)	Waste $NH_{3,4}$–N (mg L^{-1})	Plot Airspeed[a] (m s^{-1})	Airflow (L min^{-1})	pH	Temperature (°C) Water	Air In	Air Out
Scirpus											
1	1	12	14:35	2.0	177	1.6	28310	7.3	27.9	32.0	33.4
	2	24	14:35	1.0	98	1.1	24540	7.2	24.6	32.0	35.3
2	3	48	12:00	2.0	135	1.4	31745	7.6	NA	30.0	32.5
	4	60	11:30	1.0	14	0.6	26418	7.1	23.0	27.8	29.3
Typha											
1	5	12	16:05	2.0	113	0.8	26401	7.3	24.6	30.5	32.8
	6	24	08:35	1.0	115	0.2	25104	7.1	22.7	24.5	24.9
2	7	48	09:30	2.0	99	1.3	32536	7.3	24.6	26.7	27.6
	8	60	10:00	1.0	43	0.2	22725	7.3	22.3	28.6	30.0

[a] Airspeed measured by the anemometer located at the center of the enclosure, 2 meters above the plot surface.

$$V_a = \left[\frac{\frac{d_A \times F_d}{A_p}}{D}\right] \times \left[\frac{1\ \text{mg}}{1000\mu\text{g}}\right] \quad (3)$$

where

V_a = NH_3 volatilization

d_A = difference in NH_3–N captured by outlet and inlet gas–washing bottles (μg)

F_d = Airflow through enclosure (in L min^{-1}) divided by the air sampling rate of 6 L min^{-1}

A_p = Plot area (4 m^2)

D = duration of the test in hours.

Laboratory Analysis

Wastewater and enclosure samples were analyzed using EPA methods: total Kjeldahl–N (351.2) and ammonia/ammonium–N (350.1) (Kopp and McKee, 1983). Analyses were performed with a TrAAcs 800 Auto–Analyzer (Bran + Luebbe, Buffalo Grove, Ill.) or a Technicon AAII analyzer (Technicon Instruments Corp., Tarrytown, N.Y.).

Statistical Analysis

For individual field calibration and wetland tests, a studentized t–test was used to determine if the mean NH_3–N captured by the outlet bottles was significantly different from the mean NH_3–N captured by the inlet bottles. The individual t–tests were made more powerful by using a pooled standard deviation as an estimate of the sampling variance. The sampling variance of the field calibration data was estimated by pooling individual standard deviations across field calibration tests. The sampling variance of the wetland data was calculated by pooling individual standard deviations across wetland tests.

Results and Discussion

In May of 2000, the NH_3–N collected at the enclosure inlet ranged from 0.2 to 36.6 μg, while in July it ranged from 10.6 to 29.9 μg (tables 6 and 7). Variation in the NH_3–N collected likely resulted from variations in the atmospheric background NH_3, in test duration, in airflow through the enclosure, and in the location of the enclosure inlet in relation to on–site sources of atmospheric NH_3, such as the hog barn and the waste lagoon. Background NH_3 fluctuates as a function of air temperature, humidity, and wind speed (Harper, 1988; Harper et al., 2000; Hutchinson and Livingston, 1993).

In May, the NH_3–N collected at the enclosure outlet ranged from 3.1 to 77.4 μg, while in July it ranged from 11.3 to 53.9 μg (tables 6 and 7). Variations in the NH_3–N collected likely resulted from variations in NH_3 volatilized from the study plot, in NH_3 that entered the enclosure, in test duration, and in airflow through the enclosure.

For all tests, the wetlands acted as a source rather than a sink for NH_3 because outlet NH_3–N was equal to or higher than inlet NH_3–N (tables 6 and 7). The wetlands also acted as a source over a 24–hour period because tests conducted at night had outlet NH_3–N values that were significantly higher than inlet NH_3–N values. Statistical analysis indicated that a difference of greater than 10.3 g μN was significant at a 95% confidence level. Differences between NH_3–N collected at the inlet and outlet ranged from 0.6 to 56.4 □g for the entire study (tables 6 and 7). The NH_3–N volatilization rates calculated from these differences ranged from 2 to 50 mg N m^{-2} $hour^{-1}$ in May and from 1 to 19 mg N m^{-2} $hour^{-1}$ in July.

Five NH_3–N volatilization rates were not significantly different from zero (tables 6 and 7). Three of the five were measured at plots farthest from each wetland inlet (second plot in second cells). These rates are consistent with low

Table 6. Ammonia volatilization from constructed wetlands in Duplin County, North Carolina, during May of 2000 as determined from the ammonia captured at the enclosure inlet and outlet.

Cell	Plot	Test[a]	Start Time	NH_3–N (μg) In	Out	Out – In	NH_3–N Volatilization[b] (mg N m^{-2} $hour^{-1}$)
Scirpus							
1	1	1	9:40	36.6	43.7	7.2[c]	4[c]
	1	2	11:50	25.8	41.8	16.0	14
	1	3	13:50	19.0	30.1	11.1	8
	1	4	15:55	17.1	40.3	23.2	17
	1	5	20:30	21.0	35.9	14.9	8
	1	6	4:45	19.8	43.9	24.1	10
							Plot mean = 10
	2	7	13:35	17.3	38.1	20.8	16
2	1	8	11:10	6.0	49.1	43.1	50
	2	9	11:10	15.5	25.0	9.5[c]	7[c]
							Mean = 21[d]
Typha							
1	1	10	16:30	0.2	3.1	2.9[c]	2[c]
	2	11	16:10	21.0	77.4	56.4	34
2	1	12	8:30	6.8	20.5	13.7	9
	2	13	8:30	16.9	41.2	24.3	21
							Mean = 16

[a] Cross–reference with table 4.

[b] Volatilization = [(NH_3–N out – NH_3–N in) × (enclosure airflow / 6 L min–1) / 4 m2 / duration] × (1 mg / 1000 μg).

[c] Not significantly different from zero ($LSD_{0.05}$ for Out – In = 10.3).

[d] The results of tests on plot 1 were averaged to determine a single volatilization rate before the mean volatilization rate was determined for the entire wetland.

Table 7. Ammonia volatilization from constructed wetlands in Duplin County, North Carolina, during July of 2000 as determined from the ammonia captured at the enclosure inlet and outlet.

Cell	Plot	Test[a]	Start Time	NH_3–N (μg) In	Out	Out – In	NH_3–N Volatilization[b] (mg N m^{-2} $hour^{-1}$)
Scirpus							
1	1	1	14:35	13.7	37.5	23.9	14
	2	2	14:35	12.7	23.9	11.2	12
2	1	3	12:00	29.9	50.8	20.8	14
	2	4	11:30	15.5	21.1	5.6[c]	6[c]
							Mean = 11
Typha							
1	1	5	16:05	19.3	53.9	34.5	19
	2	6	8:35	10.6	21.2	10.6	11
2	1	7	9:30	11.0	31.7	20.7	14
	2	8	10:00	10.7	11.3	0.6[c]	1[c]
							Mean = 11

[a] Cross–reference with table 5.
[b] Volatilization = [(NH_3–N out – NH_3–N in) × (enclosure airflow / 6 L min^{-1}) / 4 m^2 / duration] × (1 mg / 1000 μg).
[c] Not significantly different from zero ($LSD_{0.05}$ for Out – In = 10.3).

wastewater ammonia–N concentrations at these plots (tables 4 and 5). The other two low rates were unexpected because they were measured at plots closest to the wetland inlet. It was anticipated that the wastewater ammonia concentration would be highest at the wetland inlet and decrease with increasing distance from the inlet. Therefore, NH_3 volatilization was expected to be highest at plots closest to the wetland inlet. Results were not consistent with this expectation because factors other than wastewater ammonia concentration affect NH_3 volatilization (Harper et al., 2002). The low rate measured close to the inlet of the *Scirpus* wetland likely resulted from high background NH_3 entering the enclosure (table 6). High atmospheric NH_3 can suppress NH_3 volatilization (Harper et al., 2000; Hutchinson and Livingston, 1993). There was no obvious reason for the low rate measured at the plot closest to the inlet of the *Typha* wetland, so it may be an outlier.

Multiple regression analysis was conducted to determine what factors could have affected NH_3 volatilization. No significant relationship was found between NH_3–N volatilization and select environmental parameters, despite theoretical expectations. The same was true when the analysis was conducted after excluding the potential outlier mentioned above. However, a significant relationship was uncovered when the analysis was conducted after also excluding the highest NH_3–N volatilization measured in May in the *Scirpus* wetland. The type of wetland (*Scirpus* or *Typha*), NH_4–N concentration and temperature of the wastewater, and airflow through the enclosure explained 70% of the variation in volatilization (not shown). Research on NH_3 volatilization from swine waste lagoons found that it was correlated to wind speed, to wastewater temperature, to wastewater ammonia concentration, and to wastewater pH (Harper et al., 2002).

The results of the regression analysis could indicate that NH_3–N volatilization values measured at the two excluded sites were outliers. However, the lack of a relationship using the full data set could have resulted from inaccurate measures of the independent variables rather than from inaccurate measures of NH_3–N volatilization. Therefore, all data were used in subsequent calculations of mean NH_3–N volatilization rates with notations on the effect of potential outliers.

The magnitude of NH_3 volatilization can be determined by averaging rates across each wetland, by extrapolating these hourly averages to daily averages, and by then comparing daily rates to nitrogen loading rates. The extrapolation of daytime hourly rates to daily rates was considered valid because daytime and nighttime tests in May produced similar results. However, previous studies of NH_3 volatilization have found a diurnal pattern in which NH_3 volatilization was lower during the night (Harper et al., 2002; Vallis et al., 1982). Therefore, our daily NH_3–N volatilization rates may overestimate the actual rates.

Wastewater application to the constructed wetlands produced nitrogen loading rates from 17 to 55 kg N ha^{-1} day^{-1} (table 8). The high loading rates resulted from a mechanical breakdown that prevented dilution of the wastewater by freshwater prior to application. In May, the mean NH_3–N volatilization rates were 5.0 and 3.9 kg N ha^{-1} day^{-1} for the *Scirpus* and *Typha* wetlands, respectively (table 8). Excluding the potential outliers, mean NH_3–N volatilization rates were 2.6 and 5.1 kg N ha^{-1} day^{-1} for the *Scirpus* and *Typha* wetlands, respectively. In July, mean NH_3–N volatilization rates were 2.7 and 2.7 kg N ha^{-1} day^{-1} for the *Scirpus* and *Typha* wetlands, respectively (table 8). Generally, NH_3–N volatilization rates reported here were slightly lower than the summer rates measured for swine waste lagoons (2.9 to 8.4 kg N ha^{-1} day^{-1}) with similar ammonia–N concentrations (Harper et al., 2002). This was expected because of the higher wastewater pH and wind–exposed surface area of the waste lagoons.

Ammonia volatilization removed 7% to 10% (5% to 10% excluding the contentious data) of the nitrogen loaded to the wetlands in May and removed 14% to 16% of the nitrogen load in July. These results help to resolve the recent dichotomy of opinions concerning the degree of NH_3 volatilization from wetlands that treat wastewater. Data from this study indicate that the concentration of NH_3 in wastewater underestimates NH_3 volatilization. In this study, more than 7% of ammonia volatilized, even though less than 1.1% of ammonia was in the NH_3 form (tables 8 and 9). An explanation for this is that the calculated concentration of NH_3 is an equilibrium concentration, so as NH_3 is lost to volatilization, it is replaced by conversion of NH_4^+. To

Table 8. Average N loading, N removal, and ammonia volatilization from constructed wetlands in Duplin County, North Carolina.

Month	Plant Type	N Loading (kg N ha^{-1} day^{-1})	N Removal (kg N ha^{-1} day^{-1})	NH_3 Volatilization		
				kg N ha^{-1} day^{-1}	% of load[a]	% of removal[b]
May	*Scirpus*	52	18	5.0	10	28
	Typha	55	33	3.9	7	12
July	*Scirpus*	19	14	2.7	14	19
	Typha	17	15	2.7	16	18

[a] Mass N volatilization / mass N load × 100.
[b] Mass N volatilization / mass N removed by wetland × 100.

Table 9. Free ammonia in constructed wetlands at Duplin County, North Carolina, as determined from wastewater temperature and pH.

Month	Water Temp.[a] (°C)		pH[a]		Free Ammonia[b] (%)	
	Scirpus	*Typha*	*Scirpus*	*Typha*	*Scirpus*	*Typha*
May	23.2	22.8	7.1	7.1	0.6	0.6
July	24.6	23.8	7.3	7.3	1.1	1.0

[a] Means from data presented in tables 4 and 5.
[b] Free ammonia = 10pH / ([6344 / (273 + T)] + 10pH) × 100 (modified eq. 1 from Vanotti and Hunt, 2000).

prevent NH_3 volatilization, pre–wetland nitrification of wastewater could be implemented.

In May and July, wetland processes removed from 14 to 33 kg N ha^{-1} day^{-1} from the wetlands (table 8). Therefore, NH_3 volatilization accounted for 12% to 28% of the nitrogen removed by the constructed wetlands (table 8). The highest NH_3–N volatilization rate measured in May is the reason volatilization accounted for 28% of nitrogen removal during that period. When that value is considered an outlier, then NH_3 volatilization accounted for 14% of the nitrogen removal. Using either estimate, these results show that NH_3 volatilization was not the primary nitrogen removal mechanism operating in these constructed wetlands, but its contribution to nitrogen loss should not be ignored. The balance of nitrogen loss likely resulted from denitrification because denitrification enzyme activity analysis indicated that denitrification was a significant process in the wetlands (Hunt et al., 2000). Our conclusion is reinforced by results of research on gaseous nitrogen emission from swine waste lagoons (Harper et al., 2000, 2002). These studies found that NH_3 volatilization was not the dominant mechanism for nitrogen loss from waste lagoons because dinitrogen emission from the lagoons was equal to or greater than NH_3 volatilization.

Conclusions

Laboratory and field calibrations confirmed that the enclosure could effectively measure NH_3 volatilization. For most tests, including the evening and early morning tests, the outlet NH_3–N was significantly higher than the inlet NH_3–N. Thus, NH_3 volatilization occurred, and it occurred throughout a 24–hour period. Mean NH_3–N volatilization rates ranged from 2.7 to 5.0 kg N ha^{-1} day^{-1}. These rates were obtained by extrapolating hourly rates to daily rates, a calculation that might have overestimated NH_3–N volatilization. NH_3 volatilization removed 7% to 16% of the total nitrogen loaded to the wetlands and accounted for 12% to 28% of the total nitrogen removed by the wetlands. However, the 28% value is possibly an overestimation because its calculation was heavily influenced by one high NH_3–N volatilization rate. These results indicate that, during the measurement periods, NH_3 volatilization was not responsible for the majority of nitrogen removed from the swine wastewater, but its contribution to nitrogen loss should not be ignored.

Acknowledgements

This research was funded by CSREES Grant No. 58–6657–9–011. The authors would like to acknowledge the invaluable assistance of Craig Baird from North Carolina State University; of Lowry Harper from USDA–ARS, Athens, Georgia; and of Victor Rogers, Leo McLaurin, and Aprel Ellison from the Coastal Plains Research Center. Our appreciation is also extended to the Knowles family for permission to work on their farm.

References

Asman, W. A. H. 1994. Emission and deposition of ammonia and ammonium. *Nova Acta Leopold* 70: 263–297.

Brix, H. 1993. Wastewater treatment in constructed wetlands: System design, removal processes, and treatment performance. In *Constructed Wetlands for Water Quality Improvement*, 9–22. G. A. Moshiri, ed. Boca Raton, Fla.: CRC Press.

Denmead, O. T. 1983. Micrometeorological methods for measuring gaseous losses of nitrogen in the field. In *Gaseous Loss of Nitrogen from Plant–Soil Systems*, 133–157. J. R. Freney and J. R. Simpson, eds. The Hague, The Netherlands: Martinus Nijhoff/W. Junk.

Harper, L. A. 1988. Comparisons of methods to measure ammonia volatilization in the field. In *Ammonia Volatilization from Urea Fertilizers*, 93–109. B. R. Bock and D. E. Kissel, eds. Bulletin Y–206. Muscle Shoals, Ala.: National Fertilizer Development Center, Tennessee Valley Authority.

Harper, L. A., and R. R. Sharpe. 1998. Atmospheric ammonia: Issues on transport and nitrogen isotope measurement. *Atmos. Env.* 32(3): 273–277.

Harper, L. A., R. R. Sharpe, and T. B. Parkin. 2000. Gaseous nitrogen emissions from anaerobic swine lagoons: Ammonia, nitrous oxide, and dinitrogen gas. *J. Environ. Qual.* 29(4): 1356–1365.

Harper, L. A., R. R. Sharpe, F. M. Byers, and T. B. Parkin. 2002. Nitrogen cycling through swine production systems: Ammonia, dinitrogen, and nitrous oxide emissions. *J. Animal Sci.* (in review).

Huffman, R. L., and P. W. Westerman. 1995. Estimated seepage losses from established swine waste lagoons in the Lower Coastal Plain of North Carolina. *Trans. ASAE* 38(2): 449–453.

Hunt, P. G. and M. E. Poach. 2002. State of the art for animal wastewater treatment in constructed wetlands. *Water Sci. and Technology* 44(11–12): 19–25.

Hunt, P. G., A. A. Szögi, F. J. Humenik, J. M. Rice, and K. C. Stone. 1994. Swine wastewater treatment by constructed wetlands in the southeastern U.S. In *Constructed Wetlands for*

Animal Waste Management, 144–154. P. J. DuBowy and R. P. Reaves, eds. West Lafayette, Ind.: Purdue Research Foundation.

Hunt, P. G., A. A. Szögi, F. J. Humenik, and J. M. Rice. 1999. Treatment of animal wastewater in constructed wetlands. In *Proc. 8th Intl. Conf. on the FAO ESCORENA Network on Recycling of Agricultural, Municipal, and Industrial Residues in Agriculture*, 305–313. Rennes, France. FAO and Cemagref, France.

Hunt, P. G., A. A. Szögi, F. J. Humenik, G. B. Reddy, M. E. Poach, E. J. Sadler, and K. C. Stone. 2000. Treatment of swine wastewater in wetlands with natural and agronomic plants. In *Proc. 9th Workshop of FAO ESCORENA Network on Recycling of Agricultural, Municipal, and Industrial Residues in Agriculture*, 187–192. Gargnano, Italy. Milan, Italy: University of Milan.

Hutchinson, G. L., and G. P. Livingston. 1993. Use of chamber systems to measure trace gas fluxes. In *Agricultural Ecosystem Effects on Trace Gases and Global Climate Change*, 63–77. L. A. Harper, A. R. Mosier, J. M. Duxbury, and D. E. Rolston, eds. American Society of Agronomy Special Publication No. 55. Madison, Wisc.: American Society of Agronomy.

Johnston, C. A. 1991. Sediment and nutrient retention by freshwater wetlands: Effects on surface water quality. *Critical Reviews in Environmental Control* 21(5,6): 491–565.

Kadlec, R. H., and R. L. Knight. 1996. *Treatment Wetlands*. Boca Raton, Fla.: Lewis Publishers.

Knight, R. L., V. W. E. Payne Jr., R. E. Borer, R. A. Clarke Jr., and J. H. Pries. 2000. Constructed wetlands for livestock wastewater management. *Ecological Eng.* 15(1): 41–55.

Kopp, J. F., and G. D. McKee. 1983. Methods for chemical analysis of water and wastes. USEPA Report No. EPA–600/4–79020. Cincinnati, Ohio: U.S. EPA, Office of Research and Development, Environmental Monitoring and Support Lab.

Livingston, G. P., and G. L. Hutchinson. 1995. Enclosure–based measurement of trace gas exchange: Applications and sources of error. In *Biogenic Trace Gases: Measuring Emissions from Soil and Water*, 14–51. P. A. Matson and R. C. Harriss, eds. Cambridge, Mass.: Blackwell Science.

Lockyer, D. R. 1984. A system for the measurement in the field of losses of ammonia through volatilization. *J. Sci. of Food and Agric.* 35: 837–848.

Mallin, M. A. 2000. Impacts of industrial animal production on rivers and estuaries. *American Scientist* 88(1): 26–37.

Payne, V. W. E., and R. L. Knight. 1997. Constructed wetlands for treating animal wastes: Section I. Performance, design, and operation. In *Constructed Wetlands for Animal Waste Treatment*, 1–48. Payne Engineering and CH2M Hill, eds. EPA Special Publication, Gulf of Mexico Program, Nutrient Enrichment Committee.

Stone, K. C., P. G. Hunt, F. J. Humenik, and M. H. Johnson. 1998. Impact of swine waste application on ground and stream water quality in an Eastern Coastal Plain watershed. *Trans. ASAE* 41(6): 1665–1670.

Vallis, I., L. A. Harper, V. R. Catchpoole, and K. L. Weier. 1982. Volatilization of ammonia from urine patches in a subtropical pasture. *Aust. J. Agric. Res.* 33: 97–107.

Vanotti, M. B., and P. G. Hunt. 2000. Nitrification treatment of swine wastewater with acclimated nitrifying sludge immobilized in polymer pellets. *Trans. ASAE* 43(2): 405–413.