ADVANCED TREATMENT SYSTEM FOR LIQUID SWINE MANURE USING SOLID-LIQUID SEPARATION AND NUTRIENT REMOVAL UNIT PROCESSES

M.B. Vanotti, J.M Rice, S.L. Howell, P.G. Hunt, F.J. Humenik[1]

ABSTRACT

Animal waste treatment is a significant agricultural and environmental challenge that needs additional options as a result of expanded, confined animal production. We evaluated the use of polymers to enhance separation of solids and liquid from liquid swine manure, and the application of polymer immobilized nitrifying bacteria technology (PINBT) for effective ammonia removal. Separation of solids and nutrients from untreated liquid manure and redistribution of solids to nutrient-deficient areas are critical for conserving nutrients and avoiding nutrient pollution where animal production is concentrated. Removal efficiencies of about 90% total and volatile suspended solids were obtained for flushed swine manure containing 2.2 to 15.8 g TSS/L using polyacrylamide (PAM) treatment applied at rates of 80 to120 mg/L. In contrast, screening without PAM treatment captured only 15% of the suspended solids. Although nearly all of the organic N is removed with the TSS, a similar amount still remains in the soluble, ammonia (NH_4^+) fraction. One of the primary and limiting transformations is the conversion of ammonia nitrogen to nitrate nitrogen via microbial nitrification. Our results showed that biological removal of N can be greatly enhanced with the use of acclimated microorganisms immobilized in polymer pellets. Compared to conventional systems, the use of PINBT allows an increase of about 1,000-fold more nitrifying bacteria to be retained in the reaction tanks. Nitrification rates of 650 g N/m^3-tank/day with virtually no NH_4^+ losses were obtained in a pilot study treating swine wastewater. Enhanced denitrification for the purposes of total nitrogen removal can also be attained through development of high-performance denitrifying anoxic sludges using naturally available carbon source from liquid manure.

Keywords. Animal waste treatment, Polymers, PAM, Solids-liquid separation, Ammonia removal, Nitrification, Immobilized nitrifiers, nitrifying pellets.

INTRODUCTION

Interest in finding alternative, functional and affordable methods for nutrient management of confined animal production has greatly increased. Animal feeding operations in the United States are developed with a larger number of animals concentrated in fewer farms. Large, concentrated herds generate vast amounts of waste in a relatively small area. Many areas in the Southeastern USA are producing more manure nutrients than available cropland can absorb due to a net import of nutrients as feed. At the same time, other areas with lower animal concentration have to purchase fertilizers to meet their crop nutrient demands. In North Carolina, the swine industry generates each year approximately 13 million tons of fresh manure containing 81,000 tons of nitrogen and 27,000 tons of phosphorus, and about 90% of the total manure produced is considered collectable (Barker and Zublena, 1995). This amount of untreated manure could annually provide all the fertilizer needs for North Carolina's six largest agricultural counties: Johnston, Sampson, Pitt, Wilson, Nash, and Robeson (NCSU, 1995). However, transport of this manure in a liquid form is not feasible. Thus, solids-liquid separation of untreated liquid manure and subsequent transport of solids to nutrient deficient areas is critical for conserving nutrients and lessening the environmental impact of confined

[1]The authors are Matias Vanotti, Soil Scientist, Stephen Howell, Environmental Engineer, and Patrick Hunt, Soil Scientist and Research Leader, USDA-ARS, 2611 W. Lucas St., Florence, SC 28501; Mark Rice, Extension Engineer, Dept. of Biological and Agric. Eng., Box 7625, NC State Univ., Raleigh, NC 27695; and Frank Humenik, Professor of Agricultural Engineering & Program Coordinator, Animal Waste Management Programs, Box 7927, College of Agric. and Life Sci., NC State Univ., NC 27695.

animal production systems. When solids-liquid separation is combined with more sophisticated process designs, there is the added benefit of advanced treatment methods that may eventually replace anaerobic lagoons. Although there are many existing technologies from the sewage industry that can be applied to solve animal waste problems, strategies for successful treatment of animal waste are distinctly different from municipal treatment. The strategy followed by the sewage industry is a combination of aeration and water clarification that enables discharge into a water course. Such complete treatment is unlikely to be appropriate for most farms. Nonetheless, adaption of municipal technologies is likely to be the basis from whence the appropriate technologies for animal waste can emerge. The objectives of this paper are to describe research advances we have made during the last five years in two such technologies addressing important aspects of animal waste treatment: enhanced solids-liquid separation using polymers and enhanced biological nitrogen treatment using immobilization technology.

SOLIDS-LIQUID SEPARATION TREATMENT

Modern swine production typically utilizes some type of water conveyance system to move the waste from the confinement house. Flushing systems are preferred because of their simplicity, economy, and lower ammonia emissions compared to manure scrapping systems (Barker and Driggers, 1981). Flushing is done at rates that vary from 500 to 2000 L per 1000 kg live mass per day. This high dilution results in wastewaters that have very low solids concentrations, often in the range of 0.2 to 1.5% total solids content. Although substantial amounts of carbon (C) and nutrients can be removed from industrial and municipal wastewaters by solids-liquid separation using dewatering presses and screens, most of the organic nutrients in swine wastewater effluents are contained in fine suspended particles that are not separated by available mechanical separators (Hill and Tollner, 1980). Separation of suspended solids from animal wastewater using screens and presses is very inefficient (5 to 15%), and requires chemical coagulation to bind together the small particles of solids into larger clumps (Sievers et al., 1994). Previous work (Loehr, 1973) with inorganic flocculants such as alum or calcium and iron salts showed that even though these compounds are very effective, they have limited application for animal wastewater treatment because of the large amounts of material needed and the large quantity of additional solids generated.

Our evaluation of cationic, anionic, and neutral polyacrylamide (PAM) polymers showed that the cationic type is very effective and probably a better option than alum for separating solids and nutrients from flushed swine wastewater (Vanotti and Hunt, 1999). Within the cationic PAM type, materials that had moderate-charge density (20%) were more effective than polymers with higher charge density. The reaction of PAM with the wastewater was fast and produced large, dark-brown flocs that rapidly settled out of the matrix wastewater, leaving a remarkably clear supernatant. The flocs were large enough to be effectively retained by a 1-mm opening screen.

High solids separation efficiencies were obtained in polymer trials in a feeder-to-finish operation in Bladen Co., NC [Table 1, (Vanotti et al., 1999a)]. Four houses with slatted floors containing 4800 pigs were flushed with lagoon liquid five times per day at a rate of 25 L/pig/day. Wastewater strength increased (from 5 to 25 g total solids/L) with the size of the pigs (18 to 109 kg) during the 16 wk evaluation period. Total suspended solids (TSS) and volatile suspended solids (VSS) removal efficiencies > 85 % were obtained with PAM rates of 80 to120 mg/L applied to samples containing 2.2 to 15.8 g TSS/L (Table 1). We found that it was more economical to remove solids and nutrients from higher strength wastewater. For example, the polymer usage rate for the more diluted wastewater (5 g TS/L) was > 4% (g polymer/100g dry solids separated) while the rate obtained with the highest strength wastewater (25 g TS/L) was. For a typical feeder-to-finish operation, the calculated chemical cost associated with a 1% polymer usage rate is about $1.40 per finished pig.

Table 1: Enhanced solids and nutrient separation from flushed swine manure using polyacrylamide (PAM) polymer*

Flush Constituent	Separation by Screen (%)	Separation by Screen after PAM Flocculation † (%)
Total Suspended Solids	15.4	89.5
Volatile Suspended Solids	15.0	89.2
Chemical Oxygen Demand	8.0	64.6
Organic N	13.2	80.0
Organic P	10.6	85.2

* Data is average of 5 trials during a 16 wk period. Initial concentrations: TSS = 2.2 to15.8 g/L, VSS = 1.7 to 12.6 g/L, COD = 6 to 31.3 g/L, organic N = 210 to 1280 mg/L, and org. P = 60 to 510 mg/.
† Cationic PAM; optimum rate ranged from 80 to 120 mg/L (avg.100 mg/L); 1 mm screen used.

Flocculation followed by separation of suspended solids significantly decreased COD and organic nutrient concentration in the treated effluent (Table 1). The concentration of total P in the flushes varied from 110 to 590 mg/L; approximately 85% were organic forms and the rest soluble phosphates. For nitrogen, TKN concentration ranged from 890 to 2440 mg/L, with about 45% organic N and 55% ammonia N. Inorganic N and P concentration were not decreased with PAM treatment. On the other hand, the organic nutrients were efficiently separated by PAM flocculation: 80 and 85% removal for N and P, respectively. Data in Table 1 also illustrate problems of poor nutrient and solids separation without flocculation treatment, for example: 13% for N and 11% for P using a 1-mm screen. Data in figure 1 show that the removal of organic N and P follows a close relationship with the capture of suspended solids indicating that most of the organic nutrients in flushed swine manure are contained in fine particles. On the average, 7.25 g of N and 3.3 g of P were removed from the liquid phase for every 100 g of dry TSS separated by PAM flocculation and screening (Fig. 1).

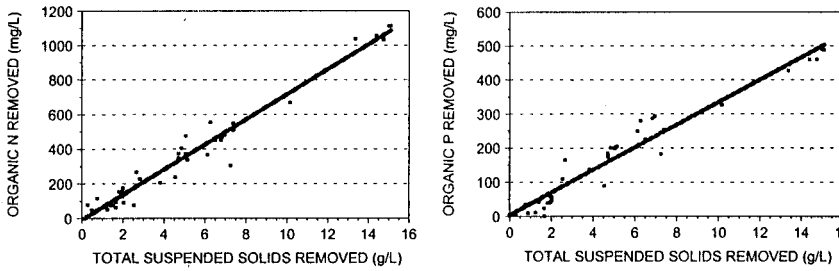

Figure 1: Nutrients removed from flushed swine manure with PAM treatment.

After the initial separation of liquids and solids, additional separation is necessary before effective and economical transport can be accomplished. Many methods are available, ranging in sophistication. Two methods that represent the passive and high tech, respectively, are the Deskins Quick-Dry Filter Bed (David Deskins, Alexandria, IN) and the Ecoliz filter press (Elf Atochem, Paris, France). The Ecoliz system has been successfully demonstrated in a 600 sow operation in Lamballe, Brittany. The flocculated manure is filtered in a compression chamber by means of two pistons equipped with very fine-meshed netting; the system dewatered polymer treated slurries (5 to 9% solids) into cakes containing 35% solids. Deskins uses an in-line polymer preparation and flocculator system which eliminates the need for batching tanks, mixers and polymer transfer pumps

(Fig. 2 A). Surface and subsurface bed stabilization is provided with a "Quick-Dry" plastic media that eliminates compaction of the sand and improves drainage environment (Fig. 2 B). The system

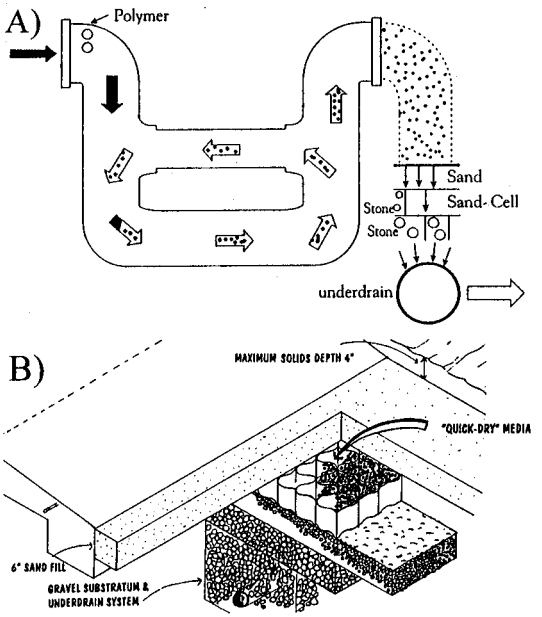

Figure 2: Liquid-solids separation system by Deskins. A) In-line flocculator for flushed wastewater; B) Quick-drying sand filter bed. System installed at Lake Wheeler Farm, NCSU, Raleigh, NC.

has been reported to produce removable cakes in 4 to 6 hours from 2% TS municipal sludges, and to reach solids content of 18% in 24 hours and 35% in 72 hours. We are currently evaluating the potential of the Deskins system for dewatering animal waste in a unit installed at the Lake Wheeler Rd. Field Laboratories, operated as part of the Animal Waste Management Programs, at NCSU, Raleigh, NC. This unit has two filter beds (20 x 16 ft) for operation on an alternate basis, receiving 30 cm of flushed swine manure during each drying cycle. The beds were constructed with several layers of media starting with a 45 cm layer of washed stone (1.9 cm size) at the bottom, then a 15 cm middle layer of pea gravel (0.95 cm size) and plastic media, and finished with 15 cm of coarse sand (0.5 mm size) on top (Fig. 2B). Initial testing of the Deskins system (April 2000) showed excellent treatment performance producing a transparent effluent and the following removal efficiencies: 93 for TSS; 92% for VSS; 88% for BOD5; and 80% for organic N and P.

NITRIFICATION TREATMENT

Although nearly all of the organic N is removed with the TSS, a similar amount still remains in the soluble, ammonia fraction. Thus, after the solids are removed, the wastewater must be treated to capture and/or transform the nutrients in the soluble fraction. One of the primary transformations is the conversion of ammonia nitrogen to nitrate nitrogen via microbial nitrification. Biological removal of N through the process of nitrification and denitrification is regarded as the most efficient and economically feasible method available for removal of N from wastewaters (Tchobanoglous and Burton, 1991). In this biological nitrogen removal process, the occurrence of complete nitrification

is a minimum requisite. The basic problem related to nitrification in wastewaters with a high content of organic carbon is the low growth rate of the nitrifying bacteria compared to heterotrophic microorganisms. Thus, recycling of surplus-activated sludge in an aerobic reactor or long hydraulic retention time (HRT) is required to retain slow growing autotrophic nitrifiers.

Several studies on nitrification of liquid swine manure (e.g. Blouin et al., 1990) have shown the need of massive inoculation of nitrifying bacteria in order to attain rapid ammonia conversion and minimize ammonia losses via volatilization. High nitrification rates are also feasible with polymer-immobilized nitrifying bacteria technology (PINBT) where the nitrifiers are entrapped in 3-mm pellets that are made of polymer materials permeable to NH_4^+ and O_2. Thus problems of maintaining enriched populations often reported for systems where cells are in suspension are solved due to the gel entrapment conditions. The successful application for municipal wastewater has been demonstrated using both natural polymers such as calcium alginate and synthetic polymers such as polyethylene glycol (PEG), or polyvinyl alcohol (PVA). Pellets made of synthetic polymers are superior to natural polymers in terms of strength and durability; their estimated life span is about 10 years. These characteristics are very important in long-term biotreatment operation. For this reason, synthetic polymer pellets are preferred for plant-scale purposes. There are currently several full-scale municipal wastewater treatment plants using this technology in Japan [Pegasus process, Takeshima et al.(1993)]. Tanaka et al. (1991) reported nitrification rates three times higher than those of the conventional-activated sludge process.

Vanotti and Hunt (2000) reported that PINBT can be adapted for treatment of animal wastewater by using acclimated microorganisms. In this bench experiment, lagoon nitrifying sludge was immobilized in PVA polymer pellets, and then used in aerated, suspended reactors to treat swine lagoon wastewater containing ~ 230 mg NH_4-N/L. Nitrification efficiencies of more than 90% were successfully obtained even at short hydraulic retention time (HRT) of 12 h. In a separate work, cultures of nitrifying bacteria adapted to high-ammonia concentration were also successfully immobilized and used to treat animal wastewater containing 350 to 2600 mg NH_4-N/L (Vanotti et al., 1999c). Performance data shown in Table 2 indicate that the nitrification process was not inhibited by these high concentrations of ammonia; nitrification rates of 900 to 1000 mg N/L-reactor/day with 97 to 100% conversion efficiency were consistently obtained.

Table 2. Batch treatment of high-ammonia animal wastewater using acclimated nitrifying bacteria immobilized in polymer pellets*

Initial NH_4-N concentration†	Ammonia removal rate	Treatment time ‡	Final nitrate + nitrite concentration	Nitrification efficiency
mg N/L	mg N/L- reactor/d	hours	mg N/L	%
344	991	8	348	100
860	924	22	855	99
1570	917	40	1525	97
2608	1013	62	2569	99

*Bench experiments using 1.2 L fluidized reactors with 15% (w/v) polyvinyl alcohol (PVA) immobilized pellets; the process pH was controlled at 8.5 with NaOH, and water temperature at 30°C with jacket.

† Initial NO_3^- and NO_2^- concentration = 0

‡ Treatment time for complete removal of ammonia (NH_4-N = 0)

We conducted a pilot experiment in Duplin Co., NC, to remove ammonia from a swine lagoon using PINBT (Vanotti et al., 1999b). The unit was modeled after the Pegasus process (Takeshima et al., 1993) used in Japanese municipal plants and contained PEG pellets supplied by the Hitachi Plant Engineering & Construction Co. of Tokyo, Japan. The results with the pilot reactor have been

excellent; the capacity for ammonia removal from swine wastewater exceeded design expectations based on municipal systems (Table 3). Ammonia removal rates up to 650 g N/m^3-tank/day were consistently obtained during summer months and a hydraulic residence time of 12 h. The nitrification activity of the pellets did not deteriorate after two years of continuous operation (Fig. 3).

Table 3. Water quality of treated swine wastewater obtained with a Pegasus immobilized biomass nitrifying reactor*

	Influent Quality	Treated Effluent
pH	8.14	7.67
Alkalinity, mg/L	1,931	333
Suspended Solids,	460	205
COD, mg/L	898	517
BOD_5, mg/L	210	79
NH_4-N, mg/L	410	40
NO_3-N, mg/L	0	396
Kjeldahl-N, mg/L	494	88
Total N	494	482

*Average process data from June 8 to July 2, 1998; continuous flow with HRT = 16 hours; NH_4-N Load = 615 mg N/m^3 tank/day. Nitrification tank contained 10% PEG pellets. Process pH controlled 7.5-7.8 with alkali additions; every mg/L of NH_4-N oxidized causes the destruction of 7.14 mg/L of alkalinity expressed as $CaCO_3$. Pilot plant evaluation in Duplin Co., NC.

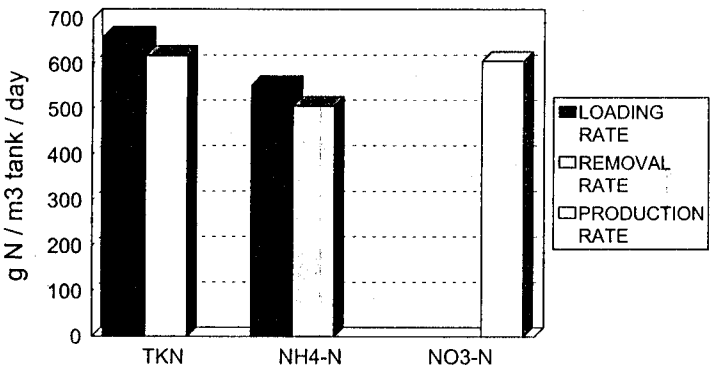

Figure 3. Nitrification performance of a Pegasus pilot unit after two years of continuous operation using swine lagoon wastewater. Average data for 7/15/99 to 9/15/99; continuous flow with HRT=12 hrs.

DENITRIFICATION TREATMENT

Biological denitrification processes can be coupled to a nitrification reactor so that total nitrogen removal is achieved. Because bacteria responsible for biological denitrification under anoxic conditions are heterotrophic, they need a suitable source of organic carbon as an energy source. In wastewater treatment, two main types of organic carbon source can be used: either an endogenous source contained in the wastewater, or an external source like methanol, ethanol, etc. In the first case,

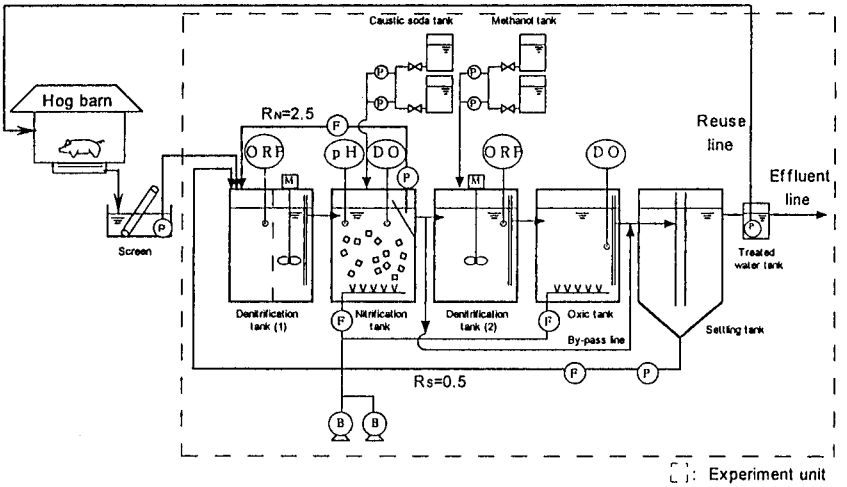

Figure 4: Biogreen nitrogen removal system with a pre-denitrification flowsheet for treatment of flushed swine manure after PAM solid-liquid separation. Denitrification tank (1) uses manure C to denitrify recycle liquid and reduce organic load to nitrification tank.

the process leads to a pre-denitrification flowsheet that recycles a part of the nitrified effluent to an anoxic tank, in the second case, to a post-denitrification configuration. A special case of a post-denitrification system is the use of constructed wetlands where plant debris and root exudates provide the organic C substrate needed for denitrification (Szogi et al., 1997). The advantage of the pre-denitrification configuration for the purposes of total nitrogen removal is that it uses a naturally available source from wastewater without the need to add any complementary chemicals (Chudoba et al., 1998). In addition, this configuration reduces both alkalinity supplements for nitrification and organic loads to the nitrification tank. Thus, it is specially suited for treatment of liquid animal waste. An important consideration is the ratio of COD to NOx-N applied to the anoxic reactor. Lynga and Balmer (1992) showed that the efficiency of biological pre-denitrification increased with an increased COD/NOx-N ratio up to an optimum value of 5 to 7 above which the performance remained constant. This minimum COD/N ratio is similar to the values of 6 to 11 obtained for flushed swine manure after PAM treatment and solids-liquid separation. The Biogreen system shown in Figure 4 illustrates a pre-denitrification configuration flowsheet coupled to a PINBT reactor. The system is under investigation at the Lake Wheeler Rd. Field Laboratories in Raleigh, NC, and uses the separated liquid effluent from the Deskins bed shown in Fig. 2. The basic pilot unit (Fig. 4) was designed to treat 1 m^3/day and contains a 1.3 m^3 anoxic denitrification tank (1) to remove BOD and NO_3-N, a 0.55 m^3 nitrification tank containing 100 L of PEG pellets for conversion of NH_4^+ to NO_3^-, a 0.63 m^3 settling tank for precipitation of SS, and is completed with pH and ORP controllers and monitoring and sampling equipment. Nitrified water and settled sludge are recirculated to the anoxic tank at a ratio of 2.5 and 0.5, respectively. A second 0.63 m^3 post-denitrification tank (2) with methanol injection and a small 20 L oxic tank to enhance settleability are also included in the evaluation to compare approaches and system flexibility.

CONCLUSIONS

Our approach to animal waste treatment has been to enhance the potential for effective and affordable treatment and ecosystem benefit. Modern animal production is a very sophisticated business, and the treatment of its residuals will also have to be sophisticated. However, strategies for successful treatment of animal waste are different from municipal treatment. Solids separation

in animal systems represents a more direct way of reducing VSS and BOD levels, with benefits of cheaper overall aeration treatment and odor-free storage. This strategy also increases the overall efficiency of nutrient utilization because nutrients can be transported away to nutrient-deficient areas, thereby allowing growers to apply lower rates near the confinement houses. Highly efficient (>90%) solids and nutrient separation from flushed manure has been obtained by flocculation through addition of PAM. After the solids are removed, the wastewater can be treated to capture and/or transform the nutrients in the soluble fraction. One of the primary transformations is the conversion of ammonia nitrogen to nitrate nitrogen via microbial nitrification. Biological removal of N can be greatly enhanced with the use of adapted nitrifying bacteria immobilized in polymer pellets. Nitrification rates of 650 g N/m^3-tank/day were obtained in a pilot study treating swine wastewater. Denitrification processes may also be enhanced through development of high-performance denitrifying anoxic sludges using naturally available carbon source from liquid manure in systems with a pre-denitrification configuration.

REFERENCES

Barker, J.C., and L.B. Driggers. 1981. Design criteria for alternative swine waste flushing systems. *Amer. Soc. Agr. Eng.* p. 367-370, 374.

Barker, J.C., and J.P. Zublena. 1995. Livestock manure nutrient assessment in North Carolina. In *Proc. 7th International Symposium on Agricultural Wastes*, ed. C.C. Ross, 98-106. St. Joseph, Mich.:ASAE.

Blouin, M., J.-G. Bisaillon, R. Beaudet and M. Ishaque. 1990. Nitrification of swine waste. *Can. J. Microbiol.* 36:273-278.

Chudoba, P., M. Pannier, A. Truc, and R. Pujol.1998. A new fixed-film mobile bed bioreactor for denitrification of wastewaters. *Wat. Sci. Tech.* 38(8-9):233-240.

Hill, D.T., and E.W. Tollner. 1980. Chemical and physical properties of flushed swine waste after screening. ASAE Paper No. 80-4056. St. Joseph, Mich.:ASAE.

Lynga, A., and P. Balmer. 1992. Denitrification in a non nitrifying activated sludge system. *Wat. Sci. Tech.* 26(5-6):1097-1104.

Loehr, R.C. 1973. Development and demonstration of nutrient removal from animal wastes. EPA Report R2-73-095. Washington, D.C.:Environmental Protection Agency.

NCSU. 1995. Options for managing odors. In *A report from the Swine Odor Task Force.* N.C. Agricultural Research Service, North Carolina State Univ., Raleigh.

Sievers, D.M., M.W. Jenner, and M. Hanna. 1994. Treatment of dilute manure wastewaters by chemical coagulation. *Transactions of the ASAE* 37:597-601.

Szogi, A.A., M.B. Vanotti, J.M. Rice, F.J. Humenik, and P.G. Hunt.1997. Renovation of nitrate-enriched swine wastewater by constructed wetlands. In *Agron. Abstr.* p.314.

Takeshima, T., K. Motegi, H. Emori and H. Nakamura. 1993. Pegasus: An innovative high-rate BOD and nitrogen removal process for municipal wastewater. In *Proc. 66th Annual Water Environment Federation Conf.* 173-181. Anaheim, Calif.:WEF.

Tanaka, K., M. Tada, T. Kimata, S. Harada, Y. Fujii, T. Mizuguchi, N. Mori and H. Emori. 1991. Development of new nitrogen removal system using nitrifying bacteria immobilized in synthetic resin pellets. *Water Science and Technology* 23:681-690.

Tchobanoglous, G. and F. L. Burton. 1991. *Wastewater Engineering: Treatment, Disposal, and Reuse.* Irwin/McGraw-Hill.

Vanotti, M. B. and P.G. Hunt.1999. Solids and nutrient removal from flushed swine manure using polyacrylamides. *Transactions of the ASAE* 42(6):0 (in press).

Vanotti, M. B. and P.G. Hunt. 2000. Nitrification treatment of swine wastewater with acclimated nitrifying sludge immobilized in polymer pellets. *Transactions of the ASAE* 43:0 (in press).

Vanotti, M.B., P.G. Hunt, and D.M.C. Rashash. 1999. Nutrient separation from liquid manure using PAM. In *ASA/CSSA/SSSA Annual Meeting Abstracts*, p. 33. Madison, Wis:ASA.

Vanotti, M.B., P.G. Hunt, J.M. Rice, and F.J. Humenik. 1999b. Treatment of nitrogen in animal wastewater with nitrifying pellets. *In* Proc. WEFTEC'99, Water Environment Federation.

Vanotti, M.B., M. Nakaoka, P.G. Hunt, A. Ellison and S. Odamura. 1999c. Treatment of high-ammonia animal wastewater with nitrifying pellets. Paper 99-4092. St. Joseph, Mich:ASAE.

ANIMAL, AGRICULTURAL AND FOOD PROCESSING WASTES

Proceedings of the Eighth International Symposium

October 9-11, 2000

Des Moines, Iowa

Edited by

James A. Moore

Published by

American Society of Agricultural Engineers

2950 Niles Road, St. Joseph, Michigan 49085-9659 USA