Microprocessor-Based Data Acquisition and Control Software for Plant Growth Chambers (Spar System)

J. E. Parsons, J. L. Dunlap, J. M. McKinion, C. J. Phene, D. N. Baker
MEMBER ASAE ASSOC. MEMBER ASAE

ABSTRACT

COMPUTER software has been developed for a microprocessor-based data acquisition and control system to measure 64 transducers and to maintain closed loop environmental control for three sunlit Soil-Plant-Atmosphere Research (SPAR) units at Florence, SC. An assembly language program and a BASIC program were written to run concurrently by using a real-time interrupt. The assembly language program performs the data acquisition, real-time control, and time keeping. The BASIC program performs the dynamic signal conditioning, the computation of control parameters, and the conversion and output of the acquired data in engineering units. Environmental control algorithms were implemented in software to control temperature, CO_2 concentration, and relative humidity. The BASIC program utilizes the history of the absolute deviation from the control levels to compute the control parameters for the assembly language program to implement. The temperature control algorithm enabled control within ± 0.5 °C for control temperatures ranging from 15 °C to 35 °C with ambient temperatures ranging from 4 °C to 32 °C. A proportional control algorithm written in BASIC enabled CO_2 control for three SPAR units within ± 10 mg/L under changing radiation load with full canopy closure using one infrared gas analyzer. A CO_2 control algorithm using light response curves is derived to project CO_2 uptake and absolute deviations from the control level to correct the coefficients of light response curves. Dynamic environmental control of the SPAR units, which involves process feedback influenced by random climatic variations, can be obtained using an inexpensive microprocessor-based system. This enables researchers to conduct precise experiments involving climatic variables to provide the necessary inputs for crop simulation modeling.

INTRODUCTION

The emphasis on more precise research needed for crop growth simulation modeling has led researchers to construct more complicated controlled environment plant growth units. These systems have provided the tools for precisely monitoring environmental conditions that affect crop growth. Simultaneously, the researchers have required more flexible and accurate methods for controlling the environmental factors. Microprocessor technology has solved some of the problems of cost and implementation of the data acquisition and environmental control.

The Soil-Plant-Atmosphere Research (SPAR) units were designed and constructed at Florence, SC (Phene et al., 1978) to provide environmental control facilities and collect data needed to develop crop growth simulation models (Hesketh et al., 1976). These models require the measurement of environmental factors, such as air temperature, and crop growth responses such as photosynthesis (Musgrave et al., 1961; Peters et al., 1974).

The initial microprocessor-based data system for the SPAR units was implemented in 1976 to monitor meteorological data (McKinion et al., 1978). Since then, the system has been expanded to provide for environmental control.

The objective of this paper is to discuss the expanded software which has been developed since the reports of McKinion et al. (1978) and Phene et al. (1978). The data acquisition and control software has been developed in the form of general algorithms so they can be applied to other plant growth chambers although different computers and data acquisition systems might be used. The discussion of the software will include the microcomputer description, an overview of the system software, the environmental control algorithms, and a description of the performance of these in the SPAR system.

SYSTEM DESCRIPTION

The microprocessor-based data acquisition system consists of an Altair 8080A* microcomputer with 32K bytes of memory and the necessary input-output (I/O) cards, a minifloppy disc drive (FD), video display terminal (CRT), a Teletype model ASR 35 (TTY), and a 12 bit analog to digital (A/D) based data acquisition system (DAS). A schematic of the various components in relation to the SPAR units is shown in Fig. 1.

The DAS consists of a Burr Brown SDM 853 12 bit A/D converter with the necessary support electronics to multiplex and measure 64 channels of data from Type T thermocouples, CO_2 transducers, and other microclimate devices with outputs in two ranges, 0-5 V and 0-5 mV. The DAS was originally designed and constructed at the USDA-SEA Cotton Production Unit,

Article was submitted for publication in April 1979; reviewed and approved for publication by the Soil and Water Division of ASAE in July 1979. Presented as ASAE Paper No. 78-5545.

Contribution from the Coastal Plains Soil and Water Conservation Research Center and the Cotton Production Research Unit, USDA-SEA-AR, in cooperation with Clemson University and Mississippi State University.

South Carolina Agricultural Experiment Station Technical Contribution No. 1649.

The authors are: J. E. PARSONS, Mathematician, USDA-SEA-AR, Florence, SC; J. L. DUNLAP, Electrical Engineering, Clemson University, Clemson, SC; J. M. McKINION, Electronic Engineer, USDA-SEA-AR, Mississippi State, MS; C. J. PHENE, Soil Scientist, USDA-SEA-AR, Fresno, CA; and D. N. BAKER, Soil Scientist, USDA-SEA-AR, Mississippi State, MS.

*Mention of product names is for description only, and not an endorsement by USDA-SEA-AR.

This article is reprinted from the TRANSACTIONS of the ASAE (Vol. 23, No. 3, pp. 589, 590, 591, 592, 593, 594, 595, 1980)
Published by the American Society of Agricultural Engineers, St. Joseph, Michigan

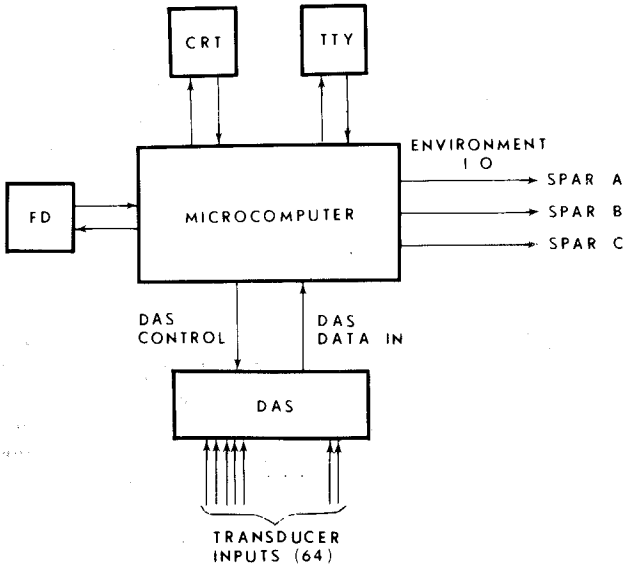

FIG. 1 A schematic of the microcomputer and data acquisition system in relation to the SPAR units.

Mississippi State University, MS and tested and later modified at the USDA-SEA Coastal Plains Soil and Water Conservation Center, Florence, SC (Dunlap et al., 1978).

The microcomputer system is interfaced to the three SPAR units using a parallel I/O card containing 8 parallel 8 bit I/O ports (Mits 8804 PIO Board); and relay driving electronics (Dunlap et al., 1978). Three parallel I/O ports are used to control the A/D converter and read the input measurements. One port is used to address the channel to be read, 0-63. The second port is used to read the low order 8 bits of the 12-bit A/D conversion. The third parallel I/O port contains the high order 4 bits of the A/D conversion along with 3 bits that are used to control the DAS. These 3 bits enable channel addressing, the initiation of an A/D conversion, and gain control. The control line of this port is used to detect the completion of an A/D conversion.

The heater, air conditioner, humidifier, and CO_2 control hardware for the three SPAR units are implemented using relay driver circuits and one 8-bit parallel I/O port (environment byte) for each SPAR unit. Each of 5 bits of this parallel port (Environment I/O, Fig. 1) is connected to a relay circuit which enables on/off control of the air conditioner, heater, humidifier, CO_2 output, and CO_2 sampling as follows:

bit 3: air conditioner on,
bit 4: heater on,
bit 5: humidifier on,
bit 6: CO_2 being added,
bit 7: CO_2 not being sampled.

Bits 0, 1, and 2 are open for future expansion. Dunlap et al. (1978) give a more detailed description of the system and the hardware.

The other parallel ports are connected to various relay circuits of other devices under software control. These include solenoid valves for each irrigation system and drainage of the transpiration collectors. One bit is used to trigger the heater current to measure heat dissipative soil matric potential sensors (Phene et al., 1971) which measure soil matric potential in the soil compartments and make irrigation decisions.

SYSTEM SOFTWARE

The software consists of a BASIC program and an interrupt service routine written in 8080 assembly language resident in memory during system operation. The interrupt service routine consists of subprograms for I/O initialization, a software clock, control of the environment bytes, and data acquisition. The BASIC program contains routines for the initialization of constants, the conversion of the acquired data to engineering units, the computation of control parameters, and the output of averages of the data every 15 min.

The BASIC routine begins execution by defining the values of the constants, calling the subprogram of the interrupt service routine to initialize the I/O ports, set up the address for the entering interrupt service program, and starting the real-time clock.

The real-time clock is set to generate an interrupt every 1/60 s (16 ms). After each interrupt, the interrupt service program enters the software clock routine. This routine increments the 1/60 s counter and checks this for 60. If 60 interrupts have passed, then the 1/60 s counter is zeroed and the second counter is incremented. The second, minute, hour, and day counters are handled in a similar fashion.

The next portion of the interrupt service program implements the real-time control. The environment byte of each SPAR unit is modified to reflect the current control conditions and output to the parallel I/O port for that SPAR unit (Environment I/O, Fig. 1).

The modification of the environment byte is achieved using control information computed in the BASIC program to control temperature, humidity, and CO_2 level in each SPAR unit. These parameters are controlled by simulating proportional control through implementation of a duty cycle for on-off control. The duty cycle is the portion of the maximum time period the control device is on. The duty cycle is computed by the BASIC program based on the measurements obtained.

Thermostatic control of a small closed volume such as the SPAR units results in short term temperature oscillations having a period of approximately 4 min. The maximum time period, corresponding to the maximum duty cycle for temperature control, was chosen to be 4.25 s which is rapid enough to mask temperature oscillations and slow enough to use with mechanical relays (Dunlap et al., 1978). For humidity, the maximun duty cycle was extended to 14 s. This was done to enable a uniform response to a duty cycle. The maximum duty cycle for CO_2 control was chosen at 60 s because the CO_2 measuring system required 20 s to obtain a true sample. Therefore, 60 s is required to measure the CO_2 level in the three SPAR units. The minimum duty cycle to output CO_2 to the SPAR unit was 0.35 s due to solenoid actuation time. The algorithm allows maximum duty cycles for temperature, CO_2, and humidity control to be adjusted in increments of 4.25 s so they are longer or shorter—a maximum of 17 min and a minimum of 4.25 s.

The data acquisition portion of the assembly language program was written to acquire an average of a number of readings (greater than 3) for each channel scanned, referred to as a BASIC scan. The samples are accumulated in a data buffer which contains a static offset parameter, the last instantaneous reading, the maximum and minimum instantaneous readings, and the sum of the readings for this BASIC scan.

The static offset parameter is utilized for the low level signal data to correct any offset errors in each channel. The static offeset parameter ranges from -0.105 mV to +0.105 mV. The static offset parameter was measured on each channel by comparing the output of a precision potentiometer to the DAS output. For each channel, the static offset is added to each reading before summing the data to the data buffer.

The minimum and maximum instantaneous data readings are used to examine the range of the acquired data for a given BASIC scan. These are subtracted from the acquired sums of the low level data. This is done to reduce the spurious readings that may be obtained during a BASIC scan. The software has provisions to compute the standard deviation and correct the data when more than two spurious readings occur.

After the readings for a BASIC scan are acquired, the minimum and maximum instantaneous readings are subtracted from the summed data. The interrupt service routine changes a memory location, designated as buffer ready, to alert the BASIC program that the data buffer is ready for the BASIC program. The BASIC program reads the data buffer and computes a mean for the acquired data.

The low level signals are corrected, using an autocorrection routine in the BASIC program. This accounts for short term instabilities of the DAS due to the variability in the electronics. Two voltage standards which included the range of output for the thermocouples and the other low level voltage transducers in the SPAR units were selected to implement this routine. A precision potentiometer is set at 7.5 °C (0.300 mV output) and a constant temperature bath is maintained at 45 °C (1.822 mV). These voltage standards are checked daily with a digital voltmeter (DVM) (Hewlett Packard Model 3455A). The following algorithm was used to correct each low level signal:

A1) $X_0 = X_1 - L$,
A2) $X_2 = X_3 - H$,
A3) $D_X = (X_2 - X_0)/(H-L)$,
A4) $\hat{C}_i = C_i + D_X (C_i - X_1)$,

where:

L, H	=	actual low and high voltage standards in mV, respectively,
X_1, X_3	=	measured output in mV from the low and high mV standards, respectively,
X_o	=	deviation from low standard in mV,
X_2	=	deviation from high standard in mV,
D_x	=	discrete estimate of the drift error rate in mV/mV,
C_i	=	output of low level channel i in mV, and
$\hat{C}_i$	=	corrected output of channel i in mV.

The computed $\hat{C}_i$ is used as the output of channel i for that BASIC scan. A comparison of the differences of the DAS measured data from the DVM values was made using the SPAR temperature thermocouples. Table 1 shows the standard deviations of the absolute deviation of the DAS measured data from the DVM values. The reduction in the standard deviations after implementation of the autocorrection routine indicates less variation from the DVM readings.

After completing this, the BASIC program changes the buffer ready memory location to alert the interrupt service routine to initiate another data scan. The BASIC program branches to routines which utilize the data to compute the temperature, humidity, and CO_2 control duty cycles.

TABLE 1. ANALYSIS OF THE PERFORMANCE OF THE AUTOCORRECTION ROUTINE

Channel description	(Standard deviation of the differences in the DVM and DAS readings in °C) Before autocorrection	After autocorrection
SPAR A temperature	± 0.23	± 0.08
SPAR B temperature	± 0.20	± 0.05
SPAR C temperature	± 0.23	± 0.10
7.5 °C* standard	†	± 0.10
45 °C* standard	± 0.45	± 0.30

*Not corrected with the autocorrection routine.
†Not measured before implementation of the autocorrection routine.

The BASIC program outputs the acquired data as 15 min averages of the BASIC scans. Before output, the data is converted to engineering units. CO_2 uptake for each SPAR unit is computed along with other parameters such as transpiration. The output is printed on the TTY and punched on paper tape to enable further offline processing. On the basis of eight samples per BASIC scan, there are 40 BASIC scans per 15-min output period. Therefore, each channel is read every 3 s.

Control Algorithms

The limitations in measuring CO_2 concentrations in the SPAR units make control of the CO_2 levels difficult. A large continuous gas sampling loop is circulated by gas pumps located in the return ducts of the heating and cooling system to make a current gas sample from each SPAR unit available at the CO_2 analyzer. The CO_2 level in each of the three SPAR units is sampled once per min for 20 s and measured electronically using one infrared gas analyzer. The measured CO_2 level is used to calculate the amount of CO_2 needed after the gas law corrections for pressure and temperature. The CO_2 output hardware consists of solenoid valves for on/off control, needle valves for regulating the flow rates, and rotometers and electronic gas flowmeters in line for measurement of flow. The solenoid valves are interfaced to a parallel I/O port on the computer via relay driving electronics. The physical CO_2 system and associated hardware are discussed in more detail by Phene et al. (1978) and Dunlap et al. (1978).

Once a CO_2 level is obtained, the BASIC program changes a memory location to alert the interrupt service routine to begin sampling the gas from the next SPAR unit. This involves the computer turning off the gas sample from the SPAR unit previously being sampled and allowing the gas sample from the next SPAR unit to flow to the infrared gas analyzer.

The first algorithm for CO_2 control was implemented in the BASIC program. This algorithm turned the CO_2 on for 0, 1, 2, or 3 periods of 20 s based on the absolute deviation from the CO_2 control level. For this algorithm

TABLE 2. STANDARD DEVIATION FROM THE MEAN CONTROL LEVEL (320 mg/L) UNDER DIFFERENT RADIATION LOADS FOR A FULL CANOPY OF WINTER WHEAT (JD 119). BASED ON 15 OBSERVATIONS FROM A 15-MIN PERIOD

SPAR	Standard deviation mg/L	Incoming radiation, W/m^2
A	6.7	732.4
C	10.6	732.4
A	7.5	676.6
B	6.7	676.6
C	9.3	676.6
A	9.3	788.2
B	8.7	788.2
A	10.6	809.1
C	5.4	809.1
A	9.6	823.1
B	9.8	823.1
C	7.7	823.1

the absolute deviation was compared with three control ranges corresponding to the four possible time intervals. In Table 2, the standard deviation from the mean control level and the integrated solar radiation are presented for representative 15-min output periods for the SPAR units. These data were obtained on Julian Date 118, 1978, with a full canopy of winter wheat growing. This method of CO_2 control requires critical monitoring and selection of the flow rate of the CO_2 being added to the SPAR units, since the minimum input period is 20 s.

Hardware was implemented to allow the use of short interval CO_2 input periods. A new CO_2 control algorithm was written based on previous research findings for photosynthesis rates in relation to solar radiation in the SPAR units. The proposed algorithm is based upon two assumptions (Phene et al., 1978): (a) There is no CO_2 uptake when there is no positive solar flux, and (b) Photosynthetic rate responds as a quadratic function of positive solar flux. With these assumptions, the light response curves are of the form:

$$P/F = a + bF \quad [1]$$

where:

P = photosynthetic rate in mg of CO_2/m^2 of soil surface/s,
F = solar flux in W/m^2,
a = dynamic coefficient in mg of $CO_2/W{\cdot}s$, and
b = dynamic coefficient in mg of $CO_2/W^2{\cdot}m^2$.

The proposed CO_2 control routine is based upon the deviation from the control level and the light response equation [1]. The SPAR units are a closed system with respect to gases. The volume of the atmospheric portion of the SPAR system was measured to be 2157 L. Using this estimate of the volume, the calculation of the amount of CO_2 removed due to the photosynthesis is possible using the CO_2 readings in mg/L.

The difficulty in using equation [1] to determine CO_2 uptake is the lack of a method of finding the solar flux during the next measurement period. Therefore, a feedback relationship is also used. This utilizes the information of the deviation from the CO_2 control level. The feedback relationship is a finite difference equation based on the first and second order time variations from the control level. The equation is

$$C_{dn} = C_n/\Delta t_n + (C_n - C_{n-1})/\Delta t_n \quad [2]$$

where:

C_{dn} = rate of deficit of CO_2 in cm^3/s at time n,
C_n = deficit of CO_2 at time n in cm^3, and
Δt_n = CO_2 sample interval in s.

Equation [2] represents the rate of CO_2 required to maintain the control level, which was not supplied in previous estimates of equation [1]. The errors induced by the estimates of the coefficients a and b in equation [1] and the solar flux estimates are corrected by equation [2].

The estimates of a and b are found by least squares using the past instantaneous solar fluxes and previous estimates of equation [1] plus the C_{dn} values of the day, that is, the actual CO_2 uptake. The presunrise initial values of a and b are assumed to be 1. Estimates of the next instantaneous solar flux are obtained using a weighted average of the 5 previous instantaneous solar fluxes.

This control algorithm has not been tested. The performance of the crude algorithm indicates that a deviation of ± 5 mg/L should be obtainable using the new algorithm along with decreased sensitivity to the CO_2 output flow rate. It should also be noted that since the CO_2 control algorithm is implemented in software, changes and optimization are easily accomplished through software modifications.

The temperature control algorithm is based on forward projection proportional control. The implementation of the environment byte and the assembly language control routine enable the heaters to be turned on for multiples of 0.016 s up to 4.25 s. The air conditioner system is run continuously to enable collection of transpiration (Phene et al., 1978) and to maintain a minimum relative humidity at a given control temperature. The minimum relative humidity ranged from 30 percent to 75 percent with no crop in the SPAR units. With winter wheat growing in the SPAR units, the relative humidity was observed to range from 50 percent to 85 percent.

The amount of time the heaters are on during the 4.25 s period is computed in BASIC. The portion of the total time period (duty cycle) is computed using the following nonlinear finite difference equation.

$$D_i = \bar{D}_i + A_1\,\tau_i + A_2\,(\tau_i - \tau_{i-1}) + B_1\,\tau_i/((B_2\,\tau_{i-1})^2 - 1) \quad [3]$$

where:

i = discrete control time,
D_i = new duty cycle in s,
$\bar{D}_i$ = weighted average of the 5 previous duty cycles in s, i.e.,
$\bar{D}_i$ = $(1/9{*}D_{i-5} + (2/9){*}D_{i-4} + (3/9){*}D_{i-3} + (2/9){*}D_{i-2} + (1/9){*}D_{i-1}$,
τ_i = deviation of temperature from the control temperature at time i in °C,
τ_{i-1} = deviation of the temperature from the control temperature at time i-1 in °C,
A_1, A_2 = first and second order estimates of duty cycle per deviation from the control temperature in s/°C, and
B_1, B_2 = stabilizing coefficients for nonequilibrium approaches to the control temperatures.

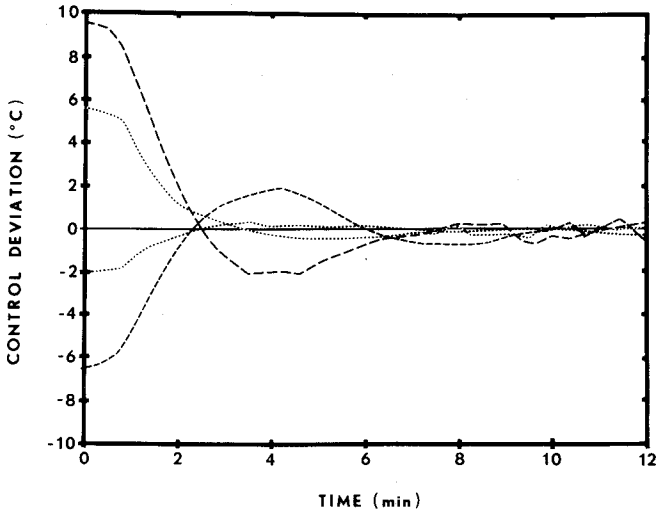

FIG. 2 Response of the temperature control algorithm to step changes in the temperature control level.

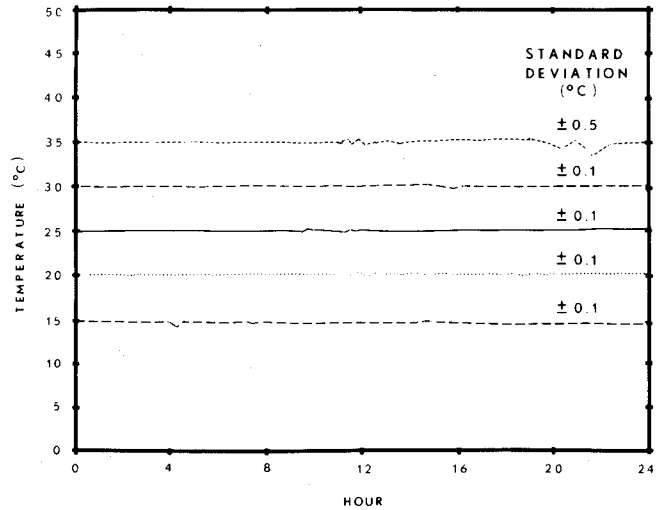

FIG. 3 Performance of the temperature control algorithm at constant temperatures within the range of temperatures without air conditioner defrost cycles.

For the SPAR units, A_1 and A_2 were chosen to be 233 ms/°C and 40 ms/°C, respectively. The units of the nonlinear term with B_1 and B_2 are in s/°C with B_1 and B_2 chosen to be 3.1 and 66.6, respectively. The new duty cycle is computed by equation [3] after each BASIC scan and limited to a minimum duty cycle of 0 s, heater always off, and a maximum duty cycle of 4.25 s, heaters always on.

Tests were run to determine the responsiveness of the routine to changes in the control temperature. At different control temperatures, the system was allowed to equilibrate and then the control temperature was changed. This was done over control temperatures ranging from 20 °C to 35 °C. The response of the algorithm was logged. The results are given in Fig. 2. The response was independent of the beginning control temperature over this range. In all cases, the system equilibrated to the new control temperature within 10 min with one overshoot and undershoot.

The main limitation of continuous air conditioning was found to be the freezing of the air conditioner coils at low control temperatures, that is, below 12 °C air temperature in the SPAR units. This required implementation of defrost cycles. The defrost cycle was initiated after the air conditioner coil temperature remained below 1 °C for 15 min. The air conditioner was turned on when the coil temperature reached 5 °C. This allowed the frost on the coil to melt. With the defrost cycles, temperature control was not as good for these lower control temperatures. For maximum ambient temperatures above 30 °C, the heater-air conditioned system was able to maintain a minimum control temperature of 15 °C without defrost cycles. As the maximum ambient temperature decreased, the minimum temperature obtainable without defrost cycle remained between 9 °C and 12 °C.

The range of constant temperatures attainable without defrost cycles is shown in Fig. 3. These were maintained during days with maximum ambient temperatures of 30 °C and minimum ambient temperatures of 20 °C. The minimum relative humidity corresponding to the constant temperatures ranged from 40 percent to 75 percent.

To simulate a diurnally changing temperature, the temperature control routine in BASIC was modified to compute a new control temperature after each BASIC scan. The function is

$$T = T_{min} + (T_{max} - T_{min}) \sin (\pi/24)*(h-t) \quad [4]$$

where:

T_{min} = minimum temperature for the day in °C,
T_{max} = maximum temperature for the day in °C,
h = time in hours,
t = time minimum temperature is to occur in hours.

Fig. 4 shows the response of the SPAR system with T_{max} = 37.7 °C, T_{min} = 12 °C, and t = 2 AM. The maximum ambient temperature was 31 °C and the minimum ambient temperature for this day was 18.5 °C. The percent relative humidity ranged from 38 percent at 37.7 °C to a maximum of 74 percent at 12 °C.

Temperature distribution patterns within the SPAR system was investigated using nine shielded thermocouples in a rectangular array. The thermocouples were placed in a 3 × 3 grid equidistant from each other and the sides of the aerial portion of the SPAR unit. For empty SPAR units operating within the range of control temperatures tested, the temperatures measured at these

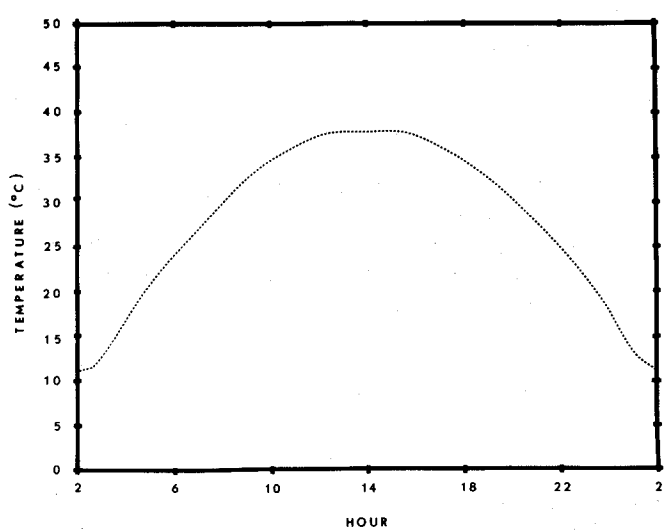

FIG. 4 Response of the temperature control algorithm to sinusoidally changing temperature control levels where: Control Temperature = 12 °C + (25.7 °C/h) sin (π/24) (time in h-2h).

TABLE 3. SUMMARY OF SPATIAL VARIABILITY TEST MEAN TEMPERATURE ± STANDARD DEVIATION, °C

Control temperature, °C	Row	Column 1	Column 2	Column 3
10.3 ± 0.7	1	12.0 ± 1.7	10.8 ± 1.4	10.7 ± 1.3
	2	11.8 ± 1.9	10.9 ± 1.5	10.1 ± 1.1
	3	11.8 ± 1.9	10.7 ± 1.5	10.6 ± 1.4
15.0 ± 0.1	1	16.5 ± 1.2	15.8 ± 0.8	15.9 ± 0.9
	2	16.3 ± 1.4	15.8 ± 0.9	15.2 ± 0.6
	3	16.5 ± 1.6	15.7 ± 1.0	15.7 ± 0.9
20.0 ± 0.0	1	20.7 ± 0.8	22.2 ± 0.4	20.6 ± 0.4
	2	20.6 ± 0.8	21.1 ± 0.5	20.4 ± 0.2
	3	20.5 ± 0.7	21.0 ± 0.3	20.6 ± 0.3
25.0 ± 0.0	1	26.3 ± 1.2	26.8 ± 0.8	26.3 ± 0.9
	2	26.4 ± 1.4	26.7 ± 0.9	25.8 ± 0.5
	3	26.3 ± 1.5	26.7 ± 1.0	26.1 ± 0.8
30.0 ± 0.2	1	31.2 ± 1.5	31.8 ± 1.0	31.7 ± 1.0
	2	31.4 ± 1.4	32.1 ± 0.9	31.3 ± 0.4
	3	31.3 ± 1.6	32.1 ± 0.9	31.4 ± 0.8
34.4 ± 0.9	1	35.1 ± 1.8	36.3 ± 1.6	36.0 ± 1.5
	2	35.6 ± 1.7	36.6 ± 1.3	35.9 ± 1.0
	3	35.3 ± 1.8	36.4 ± 1.4	35.8 ± 1.3

thermocouples were within ± 2 °C of the control temperature with a standard deviation less than 2 °C (Table 3). These data indicated that air flow within the SPAR units provides uniform temperature distribution at the control temperature distribution at the control temperatures tested. At 25 °C, the mean temperatures of the nine thermocouples ranged from 25.8 °C with the largest standard deviation of 1.5 °C (Table 3).

Humidity control is maintained by injecting a fine mist of water into the duct after the air has been heated. The injection rate of the water is implemented in a similar fashion to the CO_2 and heater control techniques, using a duty cycle to simulate proportional control. Tests on this method of changing relative humidity indicate that a high initial injection rate produces rapid changes in relative humidity. After 1 to 2 min, the changes in relative humidity are much slower. Therefore, an algorithm to take this into account is used.

The equation to compute the injection time for humidity control is

$$T_H = T_n + K_1 E_n + K_2 (E_n - E_{n-1}) \quad [5]$$

where:

T_H = injection time for the next sample interval in s,

T_n = integrated injection time over the previous five sample periods in s,

K_1 = proportionality constant for the absolute error from the control point in s per percent relative humidity,

E_n = proportionality constant for the absolute error from the control point in s per percent relative humidity,

K_2 = proportionality constant for the rate of change of the error.

Equation [5] is of the same general form as the heater control algorithm (equation [3]). The integrated injection times T_n acts as stabilizing term which converges to the stable constant rate to maintain a given control level. The error rate term and the rate of change of the error controls the approach to the control point via the constants K_1 and K_2. To compute K_1 and K_2, values of the rate of change given a series of injections times would be required. Let E_m be the deviation from a given steady state humidity induced from a constant injection time, T_c. Then K_1 would be computed by using

$$T_c = K_1 E_m \quad [6]$$

The constant K_2 would be computed by sampling over the range of humidities and integrating the consecutive terms, K_2 found from

$$T_c = K_2 (E_m - E_{m-1}) \quad [7]$$

SUMMARY

A microporcessor-based data acquisition and control system was implemented for the SPAR system. The hardware and software were designed to monitor 64 transducers and control the air temperature, relative humidity, and CO_2 level in the three SPAR units.

The software consisted of an 8080 assembly language program and a BASIC program operating concurrently through a real-time clock interrupt every 1/60 s. At each interrupt, the assembly language program updates the software clock, performs real-time implementation of control, and performs the data acquisition. The implementation of real-time control of the SPAR heaters, the humidifiers, and the CO_2 output hardware by on/off relays enabled the simulation of proportional control. The BASIC program was written to compute the control parameters required by the assembly language routine, convert the acquired reading to engineering units, and to output the data every 15 min.

The CO_2 control algorithm, implemented in the BASIC program, computes the CO_2 uptake based upon the solar flux and utilizes the feedback to continuously correct the light response curves. The time required to output this amount of CO_2 is stored in a location accessible to the assembly language routine for implementation.

Temperature control of the aerial portion of the SPAR units was achieved utilizing the BASIC program to calculate the proportion of the time the heaters would be on. The algorithm incorporates forward projection techniques to estimate the deviation from the control level based on the previous history of the system. Tests of the responsiveness of this algorithm indicated that complete recovery from step changes in the control level occurred within 10 min with one damped overshoot and undershoot. During days with ambient temperatures ranging from 20 °C to 32 °C, temperature control within the SPAR units was obtainable for control temperatures ranging from 15 °C to 35 °C. The standard deviation for control within this range was ± 0.5 °C for a 24-h period. For control temperatures from 4 °C to 15 °C, the standard deviation was within ± 0.5 °C.

Temperature distribution patterns within the empty SPAR units, measured on a 3 × 3 grid, revealed that the temperatures within the aerial portion were within ± 2 °C of the contol levels ranging between 10 °C and 35 °C.

For control temperatures ranging from 10 °C to 35 °C, minimum relative humidities ranges from 40 percent to 75 percent. The control algorithm for relative humidity involved the BASIC program's computation of the

amount of time a fine mist was being injected into the supply duct of the SPAR unit. The time was computed using the history of the absolute deviations from the relative humidity control level along with the finite difference equation. The finite difference equation used the first and second order time rate changes in the absolute deviation from the control levels and a stabilizing integrated time of injection to compute the injection rate for the next measurement period.

The software was presented in the form of algorithms to allow adaptation to other systems. The control algorithms can be calibrated for use with other environmental growth chambers. The techniques used proved to be flexible and inexpensive in terms of computer hardware. The main disadvantage is that software must be developed to provide advantages. This type of system does, however, enable researchers to obtain the precise environmental conditions required to collect data on the interactions of plant growth with plant environment.

References

1 8080/8085 Assembly language programming manual. 1977. Intel Corporation. Santa Clara, CA.

2 Bibbero, Robert J. 1977. Microprocessors in instruments and control. John Wiley and Sons, Inc., NY.

3 Dunlap, J. L., J. M. McKinion, J. E. Parsons, C. J. Phene, J. R. Lambert and D. N. Baker. 1978. Microprocessor-based data acquisition and control hardware for the SPAR system. ASAE Paper No. 78-5544. ASAE, St. Joseph, MI 49085.

4 Hesketh, J. D. and J. W. Jones. 1976. Some comments on computer simulators for plant growth—1975. Ecological Modelling 2:235-247.

5 McKinion, J. M., C. J. Phene and J. E. Parsons. 1978. Using the microcomputer in meteorological measurements. Agr. Eng. 59(3):22-23.

6 Musgrave, R. B. and D. N. Moss. 1961. Photosynthesis under field conditions: I. A portable, closed system for determining the rate of photosynthesis and respiration of corn. Crop Sci. 1:37-41.

7 Peters, D. B., B. F. Clough, R. A. Graves and G. R. Stahl. 1974. Measurement of dark respiration, evaporation and photosynthesis in field plots. Agron. J. 66:460-462.

8 Phene, C. J., G. J. Hoffman and S. L. Rawlins. 1971a. Measuring soil matric potential in situ by sensing heat dissipation within a porous body: I. Theory and sensor construction. Soil Sci. Soc. Am. Proc. 35:27-33.

9 Phene, C. J., G. J. Hoffman and S. L. Rawlins. 1971b. Measuring soil matric potential in situ by sensing heat dissipation within a porous body: II. Experimental results. Soil Sci. Soc. Am. Proc. 35:225-229.

10 Phene, C. J., D. N. Baker, J. R. Lambert, J. E. Parsons and J. M. McKinion. 1978. SPAR—a soil-plant-atmosphere research system. TRANSACTIONS of the ASAE 21(5):924-930.