Reprinted from AGRONOMY JOURNAL
Vol. 71, Sept.-Oct. 1979, p. 707-713

Utility of Stem Diameter Changes as Predictors of Plant Canopy Water Potential[1]

H. B. So, D. C. Reicosky, and H. M. Taylor[2]

ABSTRACT

Stem diameter fluctuations have been used to monitor changes in plant water potential through a dynamic method to correct for the time lag. The objective of this work was to determine whether a single day's calibration was suitable for long-term prediction of plant water potential and if the technique was applicable for different species. Plants were grown in a growth chamber, a greenhouse, and in field plots. Changes in stem diameter were monitored continuously, using linear variable differential transformers (LVDT). Leaf water potentials were measured using the pressure-chamber technique. When the stem diameter-leaf water potential relationship was corrected for time lag, change in stem diameter was closely related to leaf water potential over several days. The method of deriving leaf water potentials from stem diameter fluctuations was applicable for corn (*Zea mays* L.) and soybean (*Glycine max* (L.) Merr.). Water stress caused a decrease in sensitivity for soybean. This fact indicated that the frequency of calibration needs to be increased as the plants become stressed. Changes in stem diameter are a convenient parameter for predicting plant-canopy water potential and the method does not require daily calibration.

Additional index words: **Leaf water potential, Plant water status, *Zea mays* L., *Glycine max* (L.) Merr.**

CONTINUOUS stem diameter measurements have been used to monitor diurnal patterns of leaf water potential (Namken et al., 1969; Klepper et al., 1971; Jordan and Ritchie, 1971; Parlange et al., 1975; Huck and Klepper, 1977). The relationship between stem diameter (S_d) and leaf water potential (ψ_L) has a significant hysteresis (Klepper et al., 1971), predominantly caused by the time lag in transmittance of water potential changes from the xylem into the phloem and its surrounding cortical tissues (Molz and Klepper, 1972).

Huck and Klepper (1977) used early morning and midafternoon values of stem diameter and leaf water potential to develop a shrinkage modulus method to derive ψ_L continuously from S_d. However, this method ignores hysteresis effects. The larger the hysteresis, the greater will be the divergence between calculated and measured ψ_L. In a second method, Huck and Klepper (1977) used a dynamic simulation model with the conductivity (k) across the xylem-phloem boundary and a half-time for equilibration as fundamental parameters. This complicated method leaves some doubt about its usefulness because the analysis is very sensitive to values of xylem-phloem conductivity, and these estimates are difficult to obtain. In addition, their second method requires continuous iterations by a programmable digital computer.

Using an analogy between a tensiometer-soil system and a Linear Variable Differential Transformer (LVDT) — plant system, So (1979) developed a simpler dynamic method to correct for time lag which causes the hysteresis and converted changes in stem diameter into changes in leaf (or canopy) water potential. For brevity, the phloem and its surrounding tissues will be referred to as "phloem." Conceptually, the system is simplified by assuming that (a) xylem resistance to axial water flow is negligible relative to the resistance of the xylem-phloem boundary, (b) the only radial resistance is the xylem-phloem boundary and (c) the flow of water across this resistance is a diffusive-type flow (Molz and Klepper, 1972; Molz et al., 1973; Parlange et al., 1975). Hence, leaf water potential (ψ_L) can be calculated from the phloem water potential (ψ_P) by an equation similar to that used to correct tensiometer readings for a non-zero response time (Klute and Gardner, 1962):

$$\psi_L = \psi_X = \psi_P + T_P \frac{d\psi_P}{dt} \qquad [1]$$

where ψ_X = xylem water potential of the stem at the point of attachment of the LVDT.
T_P = plant response time or the response time of the phloem to changes in xylem water potentials.
t = time.

Equation [1] can be expanded:

$$\psi_L = \psi_P + T_P \cdot \frac{d\psi_P}{dS_d} \cdot \frac{dS_d}{dt} \qquad [2]$$

where S_d is the stem diameter, which is continuously monitored using the LVDT. The $d\psi_P/dS_d$ term is called the phloem "sensitivity" and is approximately constant. So (1979) presented details of his methods for approximating ψ, T_P and $d\psi_P/dS_d$. T_P is estimated by the period between the time when net radiation increases and the time when S_d starts to decrease rapidly and is in fact the time lag which causes the hysteresis. Using this time lag which is assumed to be constant, ψ_L at any time, t, can be shown to be equal to ψ_P at any time $(t+T_P)$. ψ_P can then be plotted against S_d at $(t+T_P)$ and the slope of the relationship gives the sensitivity $d\psi_P/dS_d$. From this relationship, ψ_P can be obtained for any value of S_d and hence ψ_L can be calculated from Eq. [2]. The method is valid for field-grown cotton (*Gossypium hirsutum* L.) and red pine (*Pinus resinosa* Ait.) trees, but requires daily calibration against leaf water potential ψ_L.

The research presented here extended the method described by So (1979) to other species and considered whether a single day's calibration by this method could also be used for predictions of leaf water potentials over a period of several days.

[1] Contribution from SEA-AR-USDA and Journal Paper J-9050, Iowa Agric. and Home Economics Exp. Stn., Ames (Project 2083) and SEA-AR, Morris, Minn. This research was financed in part by a grant from the Iowa Soybean Promotion Board. Received 14 Apr. 1978.

[2] Lecturer in soil science, Univ. of New England, Armidale, N.S.W. Australia, and soil scientists, SEA-AR-USDA, Morris, Minn. (formerly of Florence, S.C.) and Ames, Iowa, respectively.

Purchased by the United States
Department of Agriculture
for Official Use

MATERIALS AND METHODS

Changes in stem diameter were monitored continuously using LVDT's. Alternating current LVDT's were used on soybean (*Glycine max* (L.) Merr.) in Iowa growth chamber experiments. The LVDT holders were those used by Klepper et al. (1971), and the associated electronics were similar to theirs. Direct current LVDT's were used at Florence, South Carolina on corn (*Zea mays* L.) grown in the greenhouse and on field-grown soybeans.

Leaf water potentials at both locations were measured using a pressure chamber (Scholander et al., 1965) and were calculated using the method outlined by So (1979).

Growth Chamber Study

Three clear acrylic plastic tubes, 20 cm diam × 100 cm long, were filled with Sparta loamy fine sand (Entic Hapludall, sandy, mixed mesic). Soybeans were grown in the soil columns in a greenhouse with temperature controls set at 21 C. A bank of eight high-intensity fluorescent tubes was maintained 20 cm above the top of the plants. These tubes supplemented winter sunlight to a photon flux density of 350 to 800 $\mu E/m^2 \cdot$ sec of PAR (photosynthetically active radiation, 400 to 700 nm) for 16 hours/day. The plants were slightly etiolated when transferred to the growth chamber after 6 weeks.

The plants were allowed to adjust for 3 days to the growth chamber conditions. Ambient temperatures were 22 C during the day and 20 C at night. Light was supplied for 14 hours daily by four 240-cm high-intensity fluorescent tubes and eight 150-W incandescent spotlights. Photon flux density varied from 250 to 850 $\mu E/m^2 \cdot$ sec in the canopy. After the 3-day adjustment, a LVDT was attached to each plant about 10 to 15 cm from the soil surface and 3 more days were allowed for equilibration. The soil was watered daily until drying cycles were initiated on 15 January. Stem diameters were recorded continuously during four drying cycles. Leaf water potentials were measured at the end of the dark period and one or more times during some of the light periods. The experiment was stopped on 15 February.

Greenhouse Study

Sweet corn (*Zea mays* L. 'Silver Queen') was grown in half-strength Hoagland's solution in a greenhouse at Florence, S. C. Seeds were germinated in sand culture and transplanted 5 days after the seedlings had emerged. The plants were grown in 9-liter buckets with two plants per bucket. The solutions were changed at least once a week during the growing period. The greenhouse temperature was controlled between a nominal 22 C (night) and 27 C (day). However, temperatures measured with a hygrothermograph ranged from 18 to 30 C during the growing period. Extensive plant measurements were made on 4 December, when the plants were 53 days old (just after the tassel appeared but before pollination).

Stem diameter was monitored with Trans Tec model 241-000 DC-DC LVDT[3] mounted on the stalk (Fig. 1). Wind only slightly affected stem diameter measurements with the LVDT supported by the plant in this manner. The LVDT was mounted on the second internode above the soil surface after part of the sheath had been removed. Output of the LVDT, excited by a regulated 6 V power supply, was a nominal 0.827 V/mm and was recorded on a strip-chart recorder. Radial stem growth had almost stopped during the measurement period because the plant had reached vegetative maturity. Diurnal changes in stem diameter, therefore, were almost entirely due to changes in plant-water status.

The distal 30 cm of the uppermost fully developed leaves was used for measurement of leaf water potential. About 5 cm of leaf tissue was cut away from the midrib and discarded. The exposed midrib of the attached leaf was then inserted into a compression gland mounted in the wall of the pressure chamber. The compression gland was tightened to make a seal around the midrib. The reading was completed within 2 min after the leaf was cut from the plant. Although the stem diameter was measured on only one plant, leaf water potentials were measured on several plants, which had canopy configurations similar to that of the plant with the LVDT installation. Each plant occupied about 1,200 cm². All measurements were made on the plants growing inside an adequate border area occupied by other maize plants.

Solar radiation was measured with an Eppley pyranometer mounted on top of the greenhouse. The output was recorded on a strip-chart recorder.

[3] Mention of trade names does not imply endorsement by Iowa State Univ. or USDA and is included only for the benefit of the reader.

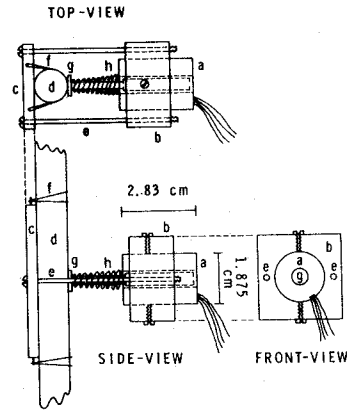

Fig. 1. Schematic diagram of DC-LVDT holder used for stem diameter measurements mounted on a plant stem. a. DC-LVDT; b. perspex holder; c. perspex backing plate; d. plant stem; e. machine screw for adjusting the mechanical zero; f. rubber bands; g. LVDT-core; h. light metal spring.

Field Study with Soybeans

Soybeans were grown on a Norfolk fine sandy loam soil (Typic Paleudualt). 'McNair 800' and 'Davis' soybeans were planted on 13 May 1975 in 8-row plots. A preplant application of 511 kg/ha of 8-24-24 fertilizer was disked into the soil. Treflan[3] (Trifluralin) was applied at the rate of 2.33 liters/ha for weed control.

The soil was irrigated through a trickle tube system when the matric potential at the 15 cm depth was equal to −0.2 bar. The daily amount of irrigation varied from 13 to 25 mm depending upon the weather forecast for the next few days. During 1975, rainfall was adequate throughout the growing season, except for a 34-day drought during the flowering and pod-filling stages. Leaf water potential was measured in detail on 18 and 25 August, 25 and 32 days into the drought. Leaf water potential was measured using the entire trifoliate of the uppermost, fully exposed leaves.

The LVDT's used in the greenhouse corn study were slightly modified to fit soybean stems. The LVDT's were mounted about 10 to 15 cm above the soil surface on representative plants with the plot. Plants in the immediate vicinity of the plant used for stem diameter measurements were sampled for leaf-water potential measurements. Previous measurements showed a maximum variation between plants of ± 2 bars. An excitation voltage of 24 V resulted in an LVDT output of 3.543 V/mm. The LVDT and solar radiation outputs were logged hourly on a data acquisition system.

'Davis' soybeans also were grown adjacent to the field-grown soybeans in aerated, half-strength, Hoagland's solution using a specially designed hydroponic system for field research (Reicosky and Peters, 1977). Stem diameters and leaf water potentials were measured on the same day by the techniques described for the field soil-grown soybeans.

RESULTS AND DISCUSSION

Growth Chamber: Soybeans

The soybean stem diameters (S_d) between 26 January and 3 February are shown in Fig. 2A. We have drawn a trend line that connects the daily maximum

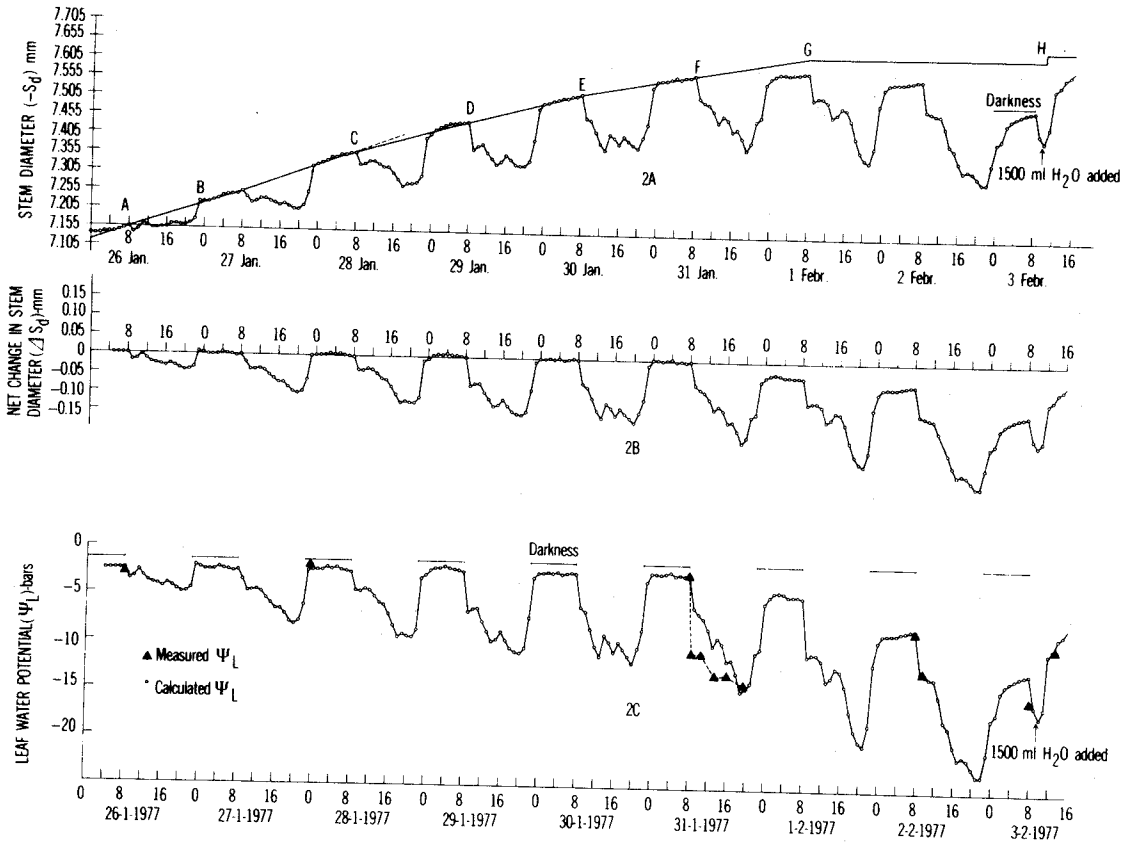

Fig. 2. Soybean stem diameters (A), diameter change (B), and leaf water potentials (C) in the growth chamber between 26 January and 3 February.

diameters (ABC - - - KLM). The change in diameter from the end of one dark period (night) to another, e.g. — B to C, represents growth as long as the plants rehydrate to the same water potential. The stem grew daily from 26 to 31 January, but the growth rate decreased with time. The diameter also increased slightly from 31 January to 1 February but not as much as it would have if the plant had fully rehydrated. Point G (Fig. 2A) represents our prediction for maximum diameter if the plant had rehydrated to the water potential of point F of Fig. 2A. No measurement of leaf water potential was made at that time. However, ψ_L at 0800 hours (predawn) on the next day (2 February) shows that the plant had not rehydrated to the maximum ψ_L of the previous days of −2.5 bars. Instead, it reached −8.2 bars. Hence, point G was found by extra-polating the line EF to 0800 hours on 1 February. From point G onward, we assumed that no growth occurred as stem diameter did not rehydrate to that at point G and drew the trend line horizontal until the soil was rewatered on 3 February.

So (1979) calculated changes in water potential from changes in stem diameter. We assumed that the effective changes in stem diameter were the difference between that predicted from the trend line and the actual measured diameter. These ΔS_d's are shown in Fig. 2B for 26 January to 3 February.

We calibrated the ψ_L-ΔS_d relationship on 31 January using ψ_L measured at 0800 hours and 2000 hours only and obtained a value of 56.6 bars/mm for the phloem sensitivity ($d\psi_P/dS_d$). We used this sensitivity to calculate ψ_L from 26 January to 7 February. Between 26 January and 3 February, the plant dehydrated to a maximum ψ_L of −2.5 bars, so we used the equation $\psi_L = 56.6(\Delta S_d)-2.5$. Between 3 and 7 February, the plant dehydrated to −4.5 bars, and we used the equation $\psi_L = 56.6(\Delta S_d)-4.5$.

Leaf water potentials (ψ_L) for 26 January to 3 February are shown in Fig. 2C. On the morning of 3 February, leaf water potential was not measured until about 20 min after cutting because of equipment problems and the measured ψ_L for 3 February is probably too low because of this time lag. Stem diameters and changes in stem diameters are shown in Fig. 3A and 3B for 3 to 12 February. Leaf water potentials (ψ_L) for this period are shown in Fig. 3C. These leaf water potentials are essentially average canopy water potentials, as will be shown in a later section.

Growth in stem diameter did not resume when the soil was watered on either 3 or 7 February, but terminal flowers appeared on the soybeans about 1 February, and vegetative growth could have already stopped.

The trend line shifted each time the soil was watered after plant stress (point H, Fig. 2A, and point K Fig. 3A). This trend line shift was caused by a shift in maximum daily potential due probably to osmotic adjustment (Hsiao, 1973).

Changes in S_d consistently lagged behind changes in ψ_L by about 6 min. This lag is defined as the plant response time (So, 1979). Because the response

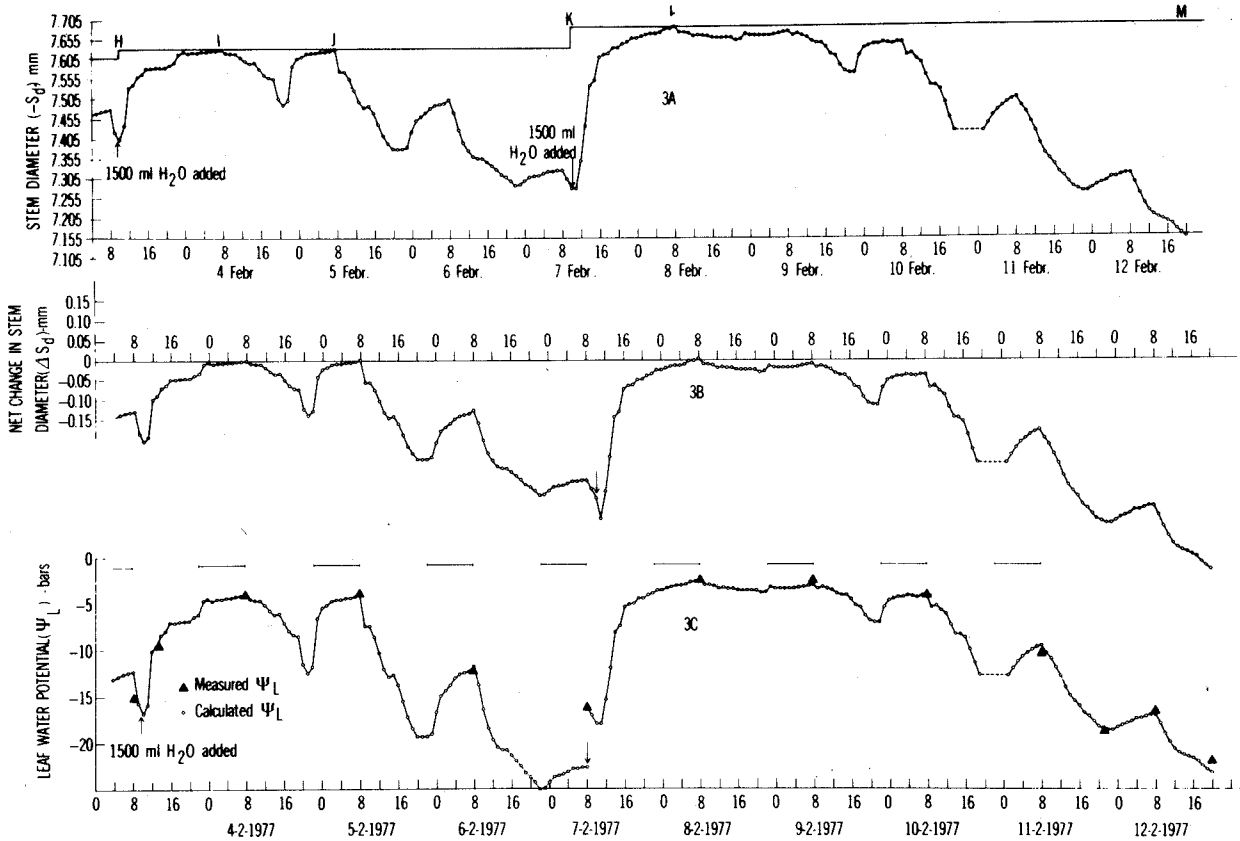

Fig. 3. Soybean stem diameters (A), diameter change (B), and leaf water potentials (C) in the growth chamber for the period 3 to 12 February.

time was very small, we assumed that the potential of the phloem and its surrounding cortical tissues (ψ_P) equilibrated instantaneously with ψ_L and, therefore, $\psi_L = \psi_P$ for the data in Fig. 2C and 3C.

The agreement between calculated and measured ψ_L's was excellent between 26 January and 7 February, except for short periods. Measured ψ_L was lower than calculated ψ_L for several hours on 31 January. This discrepancy was probably due to uneven energy distribution (250 to 850 $\mu E/m^2 \cdot s$) on the canopy because of the spot lights. ψ_L was always measured on a fully exposed leaf, but many of the leaves were subjected to lower light-energy levels. Average water potentials that cause the stem shrinkage were probably several bars higher than the measured ψ_L. We measured ψ_L's on another plant and found up to 5 or 6-bar variation when soil water content was near "field capacity." This variation within a canopy was small (0.5 to 1 bar) and the potential distribution is essentially uniform when the plant was near wilting at the end of the day (2000 hour) on 31 January. Therefore, this point was chosen for calibration of the canopy water potential against ΔS_d and the calculated ψ_L's are essentially canopy water potentials. Similarly, at predawn, the potential distributions throughout the canopy should be reasonably uniform.

Severe stress on 6 February caused a decrease in phloem sensitivity $d\psi_P/dS_d$ from 56.6 to 35.6 bars/mm. The maximum rehydration each morning was to −3.0 bars. We used the equation $\psi_L = 35.6(\Delta S_d)-3.0$ to calculate ψ_L for the drying cycle between 7 and 12 February. The agreement between measured and calculated ψ_L was satisfactory. The mechanism for the sensitivity change on 7 February is not clear but perhaps hormonal effects causing changes in tissue elasticity or osmotic regulations were involved (Hsiao, 1973).

Greenhouse: Corn

Diurnal changes in leaf-water potential and stem diameter of corn grown in Hoagland's solution under greenhouse conditions at Florence, S. C., are shown in Fig. 4. The greenhouse had full exposure to the sunrise and was partially shaded at low sun angles in the evening. Solar radiation increased rapidly at 0700 hours (data not shown) and stem diameter decreased rapidly beginning at 0730 hours (broken line in Fig. 4A). These conditions define a 0.5-hour plant response time (T_P) (So, 1979). Using this value, the potential of the phloem and cortical tissues (ψ_P) at any time t(hours) was estimated from the equation $\psi_P(t) = \psi_L(t-0.5)$ and plotted against ΔS_d. The resultant regression equation was $\psi_P = 24.4\ (\Delta S_d)-3.6$ with $r = 0.983$, which was highly significant ($P < 0.01$). Leaf water potentials (Fig. 4B) were calculated from the equation $\psi_L = \psi_P - T_P(d\ \psi_P/dS_d)\ dS_d/dt$. The agreement between calculated and measured ψ_L was satisfactory even though stem diameter and leaf water potential were measured on different plants and through local variations (shading, etc.) occur in greenhouse environments.

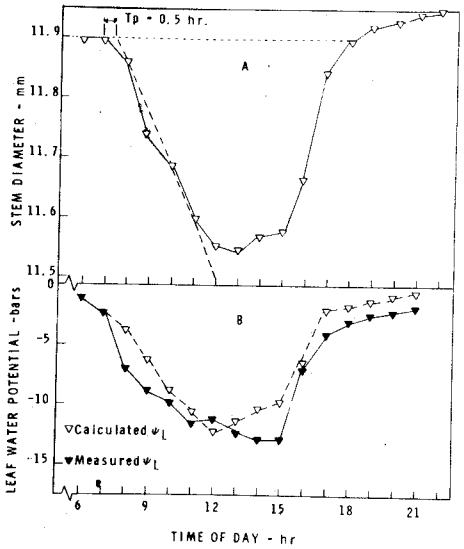

Fig. 4. Diurnal fluctuations of corn water potential (B) and stem diameter changes (A) of corn grown in half-strength Hoagland's solution.

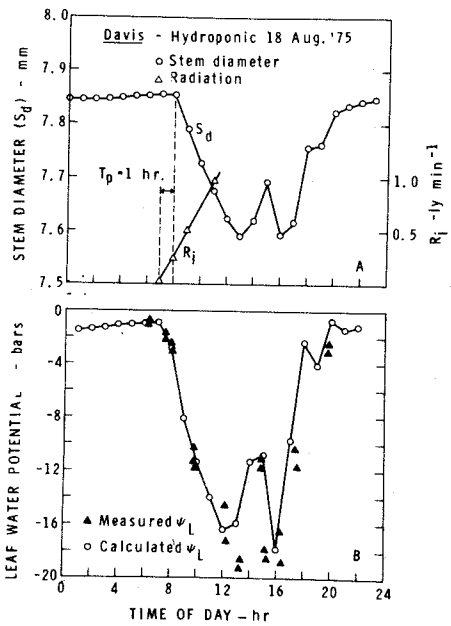

Fig. 5. Stem diameter (A) and leaf water potentials (B) on 18 August 1975 for 'Davis' soybean grown in the hydroponic system.

Field Study: Soybeans

We collected stem diameter and leaf water potential data for only one day (18 August) with 'Davis' soybeans in the hydroponic system (Fig. 5). Two calibration points were used, one at 0610 hours (predawn) and another at 1205 hours. The response time T_P was 1 hour. We calculated ψ_L from the following equations:

$$\psi_P = 56.3\ (\Delta S_d) - 0.9 \text{ (note: } d\psi_P/dS_d = 56.3)$$
$$\psi_L = \psi_P + T_P\ (56.3)\ dS_d/dt.$$

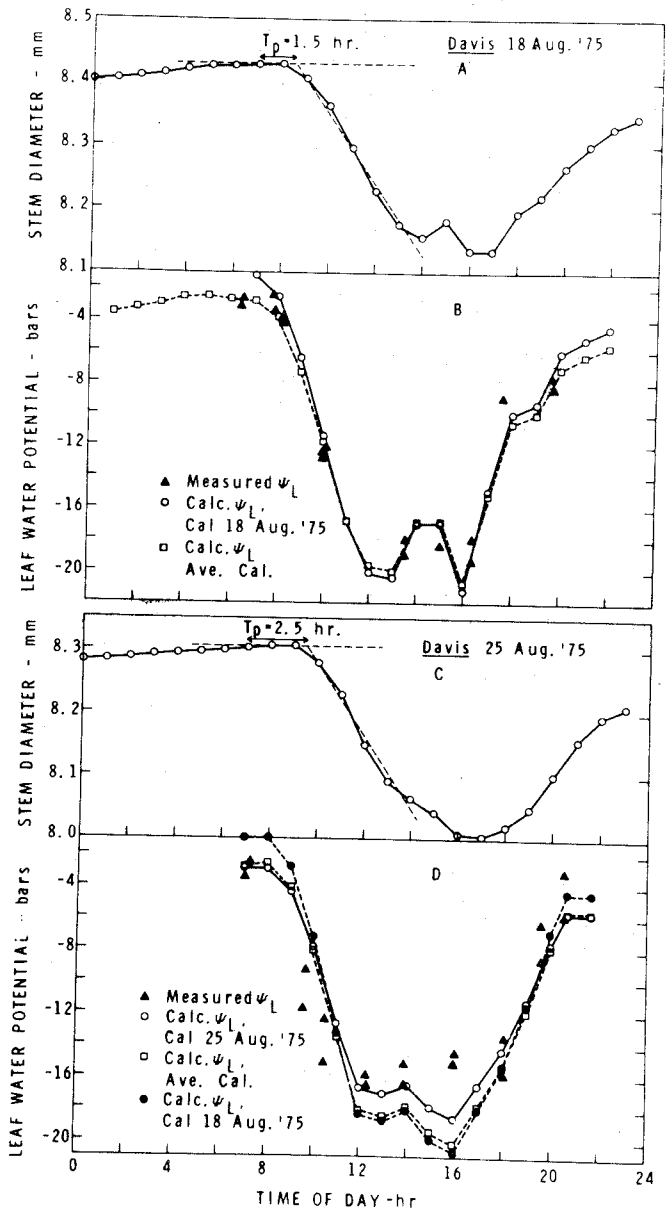

Fig. 6. Stem diameter (A, C) and leaf water potentials (B, D) for the field-grown 'Davis' soybean on 2 days in the drought cycle.

The agreement between calculated and measured ψ_L's is satisfactory.

For the 'McNair 800' and Davis soybeans grown in field plots, the relationship between S_d and ψ_L were calibrated on both days (18 and 25 August) for both cultivars, but only results for Davis are presented (Fig. 6) because the two sets were similar.

When we predicted ψ_L using the ψ_L-S_d calibration carried out on the same day, the agreement with the measured ψ_L's was satisfactory, particularly for 18 August. When we predict ψ_L on 25 August using the calibration of 18 August, the agreement was less satisfactory, particularly during midday. The sensitivities of both cultivars had decreased over that period, from 58.3 (Davis) and 50.2 (McNair) on 18 August

to 46.2 (Davis) and 52.5 (McNair) on 25 August, a decrease of about 12% on both varieties. Although this decrease was not statistically significant due to limited data, it was consistent for both varieties in the field and for 'Wayne' cultivar in the growth chamber (37% decrease due to stress) and perhaps is real.

One objective of this work was to investigate the length of time for which a single day's calibration of $\psi_L - S_d$ is valid. The results in Fig. 6 indicated that a week between calibrations probably is too long during a drying cycle and may introduce large errors in the predicted values particularly midday. When we used the average sensitivity of both days (52.2 for Davis and 46.3 for McNair) the agreement between predicted and measured ψ_L's were improved for McNair but not for Davis. It may be possible to use 1 day's calibration to calculate ψ_L's for 3 to 4 days before and after the calibration day.

DISCUSSION

We have shown that the method proposed by So (1979) for deriving ψ_L values from changes in S_d which was applicable to cotton and red pine trees is also applicable to other species such as corn and soybean. The method is based on the physical model of water flow between the xylem vessels and the phloem and its surrounding cortical tissues, which make up the bark. Stem diameter changes on woody species take place because water flows into or out of the bark region, whereas diameter of the wood remains unaffected. In corn, the vascular bundles are scattered throughout the stem (Kiesselbach, 1949), and no woody stele is present. However, the same process occurs in corn as in woody plants and water flows between the xylem vessels and the phloem and other parenchymatous tissues of the whole stem. Hence, the whole stem swells and shrinks as plant water potential fluctuates diurnally. These differences in stem geometry probably are the reason that the sensitivity $d\psi_P/dS_d$ of corn (24.4) is less than that of soybean (42 to 60), cotton (40 to 71), or red pine trees (161) (So, 1979).

Plants grown in the growth chamber with adequate supply of water at all times have small response times relative to field-grown plants. Therefore, the resistance to water flow between xylem and phloem tissues is small and is probably related to the more succulent nature of its tissues.

It is appropriate here to discuss the nature of the leaf water potentials measured by the method described in this paper. The phloem and surrounding cortical tissues swell and shrink as water flows in or out of the tissues in response to water potential changes in the corresponding xylem vessels which, in turn, responds to changes in the potential of the leaves. Thus, at the point of measurement, the stem diameter changes in response to changes in the potential of all the leaves above that particular point. Hence, a measurement of ψ_L on one or two leaves does not necessarily provide a measure of the canopy water potential, except when the plant is near wilting, as discussed earlier in this paper. It provides an estimate of the canopy water potential with a systematic bias relative to that potential. This could be the reason that the calculated ψ_L for corn is always higher than the measured values (Fig. 4). However, in the field, measurements on fully exposed top leaves provides an estimate of the potential of that part of the canopy that provides the largest contribution to the plant's transpirational losses.

The decrease in sensitivity with stress is of particular interest because this sensitivity change could determine the frequency of calibration needed under various environmental conditions. Soybeans grown in the growth chamber significantly decreased in sensitivity overnight due to the severe stress. The good agreement between predicted and measured ψ_L's of the soybeans grown in the growth chamber, indicated that the physical properties of the phloem and cortical tissues do not significantly change with age, at least over the experimental period reported, with respect to waterflow and tissue elasticity. The decrease in sensitivity of the field-grown soybeans between 18 and 25 August is probably a similar effect of the water stress experienced at the end of that drought period. A decrease in sensitivity means that a larger stem-diameter change is required to produce a unit change in water potential. To achieve such a change, the tissues must become softer. A similar phenomenon has been reported by Cleland (1971) on cell walls of *Avena* coleoptile, which seems to soften when growth is prevented by a lack of turgor.

We consistently observed that after we watered the plants, stem diameters returned to their original size or became greater if growth resumed. This response was consistent with the fundamental assumption that the phloem and cortical tissues are fully elastic (So, 1979), although its modulus of elasticity may be altered.

In conclusion, we have shown that (a) the change in stem diameter is a convenient parameter for monitoring leaf or canopy water potential on both monocotyledonous and dicotyledonous plants as well as on trees, and (b) the method does not require daily calibration.

ACKNOWLEDGMENT

The authors thank Mr. V. D. Browning, SEA-USDA, Auburn, Ala., for loaning the LVDT's and holders, and R. B. Campbell, SEA-USDA, Florence, S. C. for the mount design in Fig. 1.

LITERATURE CITED

1. Cleland, R. 1971. Cell wall extension. Ann. Rev. Plant Physiol. 22:197-222.
2. Hsiao, T. C. 1973. Plant responses to water stress. Ann. Rev. Plant Physiol. 24:519-570.
3. Huck, M. G., and B. Klepper. 1977. Water relation of Cotton II. Continuous estimates of plant water potential from stem diameter measurements. Agron. J. 69:593-597.
4. Jordan, W. R., and J. T. Ritchie. 1971. Influence of soil water stress on evaporation, root absorption and internal water status of cotton. Plant Physiol. 48:783-788.
5. Kiesselbach, T. A. 1949. The Structure and Reproduction of Corn. Research Bull. 161, Univ. of Nebraska, College of Agric., Agric. Exp. Stn., Lincoln.
6. Klepper, B., V. D. Browning, and H. M. Taylor. 1971. Stem diameter in relation to plant water status. Plant Physiol. 48:683-685.

7. Klute, A., and W. R. Gardner. 1962. Tensiometer response time. Soil Sci. 93:204-207.
8. Molz, F. J., and B. Klepper. 1972. Radial propagation of water potential in stems. Agron. J. 64:469-473.
9. ———, and ———, and V. D. Browning. 1973. Radial diffusion of free energy in stem phloem: An experimental study. Agron. J. 65:219-222.
10. Namken, L. N., J. F. Bartholic, and J. R. Runkles. 1969. Monitoring cotton plant stem radius as an indication of water stress. Agron. J. 61:891-893.
11. Parlange, J. Y., N. C. Turner, and P. E. Waggoner. 1975. Water uptake, diameter change and non-linear diffusion in tree stems. Plant Physiol. 55:247 250.
12. Reicosky, D. C., and D. B. Peters. 1977. A portable chamber for rapid evapotranspiration measurements on field plots. Agron. J. 69:729-732.
13. Scholander, P. F., H. T. Hammel, E. D. Bradstreet, and E. A. Hemmingsen. 1965. Sap pressure in vascular plants. Science 148:339-346.
14. So, H. B. 1979. An analysis of the relationship between stem diameter and leaf water potentials. Agron. J. 71:675–679.