PAPER NO. 79-5027

A Microprocessor-Based Soil Plant Atmosphere Research System

by

C. J. Phene
Supv. Soil Scientist
USDA-SEA-AR
Fresno, CA

D. N. Baker
Agronomist
USDA-SEA-AR
Mississippi State, MS

J. R. Lambert
Professor
Clemson University
Clemson, SC

J. M. McKinion
Electronic Engineer
USDA-SEA-AR
Mississippi State, MS

J. E. Parsons
Mathematician
USDA-SEA-AR
Florence, SC

J. L. Dunlap
Electrical Engineer
Clemson University
Clemson, SC

For presentation at the 1979 Summer Meeting
of ASAE and CSAE

University of Manitoba
Winnipeg, Canada
June 24-27, 1979

SUMMARY:

A computer-controlled sunlit environmental growth chamber system for studying whole-plant responses was designed, constructed, and tested: The Soil-Plant-Atmosphere Research (SPAR) Unit. A microprocessor-based data acquisition systems enables precise and rapid monitoring and control of the environment around the aerial part of the plant and its root zone to define plant growth processes and to provide the data necessary for development of crop simulators.

Joint Meeting of

American Society of Agricultural Engineers

and

Canadian Society of Agricultural Engineering

CSAE SCGR

Papers presented before this meeting are considered to be the property of the Societies. In general, the Societies reserve the right of first publication of such papers, in complete form. However, there is no objection to publication, in condensed form with credit to this meeting and the author.

The Societies are not responsible for statements or opinions advanced in papers or discussions at this meeting. Papers have not been subjected to the review process by ASAE or CSAE editorial committees; therefore, are not to be considered as refereed.

Introduction

Comprehensive studies of plant dynamics, as affected by the ambient environment, require simultaneous measurements of plant roots and tops under precisely controlled environment, Baker (1965, 1966), Curry (1971) and Hesketh, et al (1976). In a recent paper, Phene, et al (1978) reviewed the need for these precise measurements in the development of plant-growth simulation models and described the design, construction and testing of a Soil Plant Atmosphere Research System (SPAR) capable of rigorous and precise measurements of mass and gas exchanges between the plants and the controlled ambient environment. Similarly, environmental chambers of various sizes and capacities have been designed and constructed previously to make these measurements: Moss (1963), Koller and Samish (1974), Jarvis and Slatyer (1966), and Hoffman, et al. (1969).

Microprocessor and calculator-based data acquisition systems were used simultaneously in the original SPAR units for rapid control and monitoring of environmental variables, irrigation and measurements of photosynthesis (McKinion, et al., 1977). This effort represented a first partial attempt at solving the problem with software rather than hardware-oriented control logic. In subsequent papers, Parsons, et al. (1978) and Dunlap, et al. (1978) have presented updated versions of software and hardware monitoring and control systems for the modified SPAR units.

This paper describes the SPAR units and their modifications and summarizes the software and hardware modifications discussed in detail by Parsons, et al., and Dunlap, et al., emphasizing the advantages derived from the integrated software control concept.

The SPAR System

The original SPAR units were described in detail by Phene, et al. (1978). The SPAR units (shown in Fig. 1 and schematized in Fig. 2) each consists of a steel soil bin (2 x 0.5 x 1 m) covered with an acrylic aerial chamber (1.5 m high) which is secured and sealed to the top of the base. Each SPAR unit is designed to contain several plant rows, 0.5 m long, perpendicular to the bin length and oriented in a north-south direction.

The aerial chamber of each SPAR unit is constructed of 3.2-mm thick clear acrylic plastic sheets bolted to an aluminum angle frame and sealed with RTV* sealant. One of the lateral side panels (1.5 x 2 m) is hinged at the top of the aerial chamber (Fig. 1) for access to the plants. A closed-cell molded rubber gasket is glued to this door and another to the frame to seal the door air-tight with latches. Each lateral acrylic plastic panel is partially shaded by an adjustable plastic screen which is raised daily to the height of the plant to simulate within-row shading as the crop grows.

The steel base contains the soil and the root system of the crop. Soil and roots in each of the bins can be totally exposed on one side by removing an exterior lateral side panel (1 m high x 2 m wide). A grid of nine access ports (75 mm in diameter and 0.5 m apart) are located opposite this lateral side panel to provide quick access at 0.15-, 0.50-, and 0.80-m soil depths. These access ports, sealed with rubber stoppers (No. 14), may also be used to install sensors without removing the lateral side panel. Ceramic candles (0.45 m long and 5 mm in diameter, Selas flotronic)*, connected 50 mm apart with flexible plastic tubing to a 12.7-mm diameter copper-tube manifold, were installed on a bed of fine sand about 25 mm from the bottom of the bin. These ceramic candles can be used for drainage, or to establish a given soil-matric potential or water table control by subirrigation. The soil bin is separated from the aerial chamber by plastic sheets, sealed around each plant and at the edges of the soil bin with duct tape to minimize gas exchange between the soil and aerial chambers.

An electrical junction box, containing 180 individual gold pin connections, was installed outside each bin. Electrical conductors (18 AWG), shielded in groups of four, were buried underground in four neoprene-jacketed cables and used to connect instrumentation to computerized data acquisition systems, located in the laboratory, about 50 m from the SPAR units.

The ambient temperature in the aerial chamber is controlled by a microcomputer using the air-conditioner and electric heater (although it may revert to thermostatic control in case of computer failure). The temperature of the soil bins is controlled independently by the chamber air by a heat pump, which heats or cools brine in a 130-liter tank. The brine is then pumped through copper tubing under insulation placed around the outside of each soil bin.

---

* Trade names are used for identification purposes only and not to imply preference for this item by the USDA.

Each SPAR unit is equipped with an automatic irrigation system activated by a remotely controlled, electrical solenoid valve based on electronic feedback measurements of soil moisture sensors (MCS, Inc. Model 6000)* installed in each soil bin (Phene, et al., 1971, 73).

Micrometeorological variables, like solar radiation, net radiation; air, leaf, and soil temperatures, CO_2 assimilation, and relative humidity are measured 60 times per min by microcomputer-based (Altair, Model 8800)* digital data acquisition system (DDAS). Every 15 min averaged measurements are linearized, converted to the desired units, and printed and punched on paper tape by a teletypewriter. Soil water, plant transpiration, and water stress are measured, recorded, printed, and may be used to determine irrigation requirements and to initiate automatic irrigation through the DDAS. Plant-water stress is measured continuously with stem diameter-measuring instruments (LVDT) and by calibrating these measurements with leaf water potential several times during the growing season.

The air aliquot from each chamber is cycled continuously through a condensing coil, through a drying column to remove the water vapor from the air, and every minute through an infrared CO_2 analyzer (Beckman, Model 865)*. The output of the analyzer is recorded by the DDAS and used to control the CO_2 content in each SPAR unit at the desired level. If the CO_2 content is low with respect to the control set point, a solenoid valve is opened automatically to feed CO_2 into the chamber for a predetermined time. The flow rate and the length of time that the solenoid valve is opened are measured by the DDAS. The CO_2 temperature and the barometric pressure are measured continuously to provide pressure and temperature corrections for calculating the mass of CO_2 added to each chamber during a 15-min period. Apparent net photosynthesis (P_N) is calculated from the plant absorption of CO_2 (Phene, et al., 1978).

Description and explanation of instrumentation and measurement of CO_2 and apparent net photosynthesis (P_N), transpiration, soil water, irrigation, and plant variables are given in detail by Phene, et al. (1978).

After two years of operation, it was decided to modify the SPAR system to improve the accuracy, the response time, and the flexibility of the system. This paper presents the various modifications performed and the resulting measurements and control improvements.

Modifications

Several operational criteria were defined at the onset of this project to ensure the accuracy and flexibility of the SPAR system. High priority was given to designing a large, outdoor, sunlit growth chamber capable of monitoring rapid changes in CO_2, temperature and humidity in an enclosed crop canopy. The system was to be capable of rapid time-response to control these variables in the environment surrounding the crop canopy for steady state and sinusoidally changing ambient temperatures ranging from 10 to 35°C. Control flexibility to achieve diversified research objectives was also considered a high priority factor.

The modifications performed involve 4 major areas: 1. The air flow-distribution and conditioning system; 2. The physical plant (SPAR units); 3. The computerized data acquisition system; and 4. The system monitoring and control software.

1. The air flow-distribution and conditioning system
   Following the first two experimental seasons, the air ducts were increased in size to accommodate a larger air conditioner/heater system and to increase the air flow capacity required for rapid response of the SPAR units, in particular, when the chamber was filled with large plants (Figures 1 and 2). The new ducts, with a capacity of about 4 times that of the original ducts, were sealed with silicone rubber and insulated inside with water-proof fiberglass (2.5 cm thick) and outside with several coats of asbestos-base paint. Six adjustable registers (each 50 x 15 cm) 3 inlets at the top and 3 return flows at the bottom of the aerial chamber were installed to distribute the air evenly throughout the chamber. The air sampling pump was installed inside and at the end of the return flow duct. An equalizing air by-pass with a manually adjustable baffle was installed between the inlet and return flow ducts to balance the pressure within the system.

   The air conditioner and heater capacities were increased respectively from 5.6 to 7.5 and from 5.8 to 10.0 Kw to satisfy the control needed for year around operation. Because the air conditioner operates continuously except during programmed-defrosting periods, a hot gas by-pass valve is used to decrease the cooling capacity of the air conditioner during cold weather or when operating at low temperatures. Variable heat duty cycles are determined by software to maintain constant chamber temperature. A water-atomizer humidifier is installed on the inlet duct after the heater and is used in conjunction with continuous air cooling to maintain constant relative humidity conditions.

2. The physical plant (SPAR Units)

The determination of root distribution and growth was simplified and enhanced through the installation of a gridded window on the north side of the soil bin (Figure 3). The window is normally covered with a wooden shutter to keep the root system in the dark. Temporal and spatial root distributions observed at the window can be calibrated against those obtained by conventional soil sampling method (Phene, et al. 1978).

All electrical power wires are installed in metal conduits and buried underground to the Junction/Switch Box and to the power source.

The door latching was modified to minimize air leaks in the chamber (Figure 1). Eighteen screw-type latches, 30 cm apart, and a continuous hinge across the top are used to compress the closed-cell molded rubber gasket between the door and the frame (twice the number of latches which was used in the original design).

Electronic mass flowmeters were installed in each unit for measuring water used by the irrigation system, the humidifier (Flow Technology, Model #FT1-N2-LJ)* and to monitor the CO_2 measurement and control system (Datametric, Model #800-LM)*. These instruments were used to record data for decision-making every minute and for calculation of 15-min computer outputs for permanent record.

3. The Computerized Data Acquisition and Control System

The microcomputer. The advent of microcomputer has revolutionized the field of computerized process control. Because of their size, relative simplicity, expandability, versatility, and low cost, microcomputers can be useful in a multitude of applications. The microcomputer system (Altair, Model 8800)* was implemented and increased in capacity to 32 K bytes of Random Access Memory (RAM). The microcomputer architecture is shown in Figure 4. A mini-floppy disc controller and drive (Micropolis Model 88-2SIO)*, and a four port parallel interface card (Mits Model 88-4PIO)* were added to the system. The floppy disc is supplied with a controller, assembly language, and BASIC operating systems which includes a bootstrap program in non-volatile read only memory (ROM) and serves as an off-line storage medium. It is not used for on-line data storage since the transfer of data disables the software clock.

The vector interrupt card generates an interrupt at precise time intervals which cause the central processor to suspend its normal operation and branch to a specific location in memory. The timing and control subprogram begins there and includes the real time clock and all time dependent control functions. Parsons, et al. (1978) give details of the subprogram logic and operation.

The serial interface card provides the means for the computer to communicate with terminal devices. Printout and punched paper tape of all 15 minute averages are recorded permanently via teleprinter (Teletype, Model ASR 35)* a video terminal (Soroc Model IQ-120)* displays instantaneous control parameters and selectable channel outputs so that control and measurement quality may be evaluated at a glance (Figures 5 and 6).

The parallel interface card links the computer with the digital data acquisition system (DDAS) and environmental control hardware. It provides 64 bi-directional data lines from the computer, divided into eight ports. Each port is associated with two control lines, one of which is bi-directional data lines from the computer, divided into eight ports. Each port is associated with two control lines, one of which is bi-directional. Data and control lines, are binary and compatible with Transistor-Transistor Logic (TTL). The computer monitors the status of measurement devices, gathers data with the input lines, and controls devices with the output lines.

The digital data acquisition system (DDAS). Acquisition of analog data is the primary function of the DDAS since it provides the microcomputer with feedback data to control the SPAR units. The DDAS converts each of the 64 differential analog inputs into a 12-bit binary representation of the analog voltage at the selected input for transfer into the computer. Figure 7 is a block diagram of the DDAS. The 64 differential inputs connect to eight solid state analog multiplexers (Burr-Brown, MPC-8D)* through individual low pass RC filters. Each multiplexer selects one of eight differential input lines, and connects that analog voltage to a data acquisition module (Burr-Brown, SMD-853)* (Dunlap, et al. 1978).

The data acquisition module (DAM) is a hybrid circuit with eight input multiplexers, programmable gain instrumentation amplifier, sample and hold circuit, and analog to digital converter (ADC). Each of the eight out-board multiplexers feeds one channel of the DAM's multiplexer which is connected to the instrumentation amplifier. The gain of the amplifier may be programmed to unity to to 1000 for ranges of 0-5 V or 0-5 mV, respectively.

Interfacing and Instrumentation are discussed in detail by Phene, et al., (1978) for the original system and by Dunlap, et al., (1978) for the modified system.

Feedback control. Rapid measurements of the 64 input channels through the DDAS are used by the microprocessor to calculate accurately and execute immediately the necessary control corrections to maintain each chamber environment within the planned range. Control redundancy is achieved for the critical functions by reverting the system to electrical/mechanical control in case of computer failure. A high degree of redundancy is needed to protect the crop from system's malfunctions or failures because of the time invested in growing the crop.

4. The monitoring and controlling software
Because of the versatility and complexity of the control and monitoring algorighms, it was decided that software monitoring and control would provide the most flexible and rapid means of achieving our objectives. Parsons, et al., (1978) have developed a real time software package for the microprocessor-based DDAS. An assembly language program and a BASIC program were written to operate concurrently by using a real-time interrupt. The assembly language program performs input/output initialization, data acquisition, real-time control, and time keeping. The BASIC program performs the dynamic signal conditioning, the computation of control parameters, and the conversion and output of the acquired data in engineering units. Environmental control algorithms were implemented in the software to control temperature, CO_2 concentration, and relative humidity. The BASIC program utilizes the history of the absolute deviation from the control levels to compute the control parameters for the assembly language program to implement. Sixty times every second, the assembly language program updates the software clock and implements heater, humidifier and CO_2 controls by on/off relays emulating proportional controls. Figure 8 summarizes the process flow for the assembly language and BASIC programs. Complete software and control algorithms are provided by Parson, et al., (1978).

Results and Discussion

The modifications performed on the SPAR units have improved the system's overall accuracy, range, flexibility and ease of operation. The combination of improved air flow, air distribution and air conditioning together with the implementation of new computer hardware, software and signal conditioning and control algorithms has demonstrated the values of this approach for control environment systems such as the SPAR units. Accurate and flexible control of temperature, relative humidity and CO_2 level and system flexibility and versatility can be achieved with less complicated control hardware.

Enlarging the air flow capacity by a factor of 4 without increasing the air velocity resulted in a total air exchange of an empty SPAR unit within one minute. Increasing the heating and cooling capacities were therefore necessary to achieve the rapid response to change in control or ambient conditions. For instance the temperature of an empty SPAR unit can be raised at a maximum rate of 5°C min^{-1}. Similarly, the temperature can be lowered

at a maximum rate of 4°C min^{-1}. Since the control method is proportionally based on rapid feedback (60 sec^{-1}) these maximum rates of temperature change are seldom needed. Continuous air cooling also eliminated condensation inside the chamber. The addition of a humidifier was necessary to control the relative humidity of a continuously cooled system; however, this necessitated measuring the amount of water which was added by the humidifier and subtracting this amount from the transpiration measurement. The humidifier system allowed relative humidity control between 40 and 85% at ± 5% of the measurement.

The CO_2 measurement and control system was enhanced by the installation of electronic mass flowmeters to measure the amount of CO_2 added to each SPAR unit. This measurement permitted real time calculation of instantaneous and total apparent P_N rates.

The temperature control algorithm developed by Parsons et al. (1978) is based on forward projection proportional control. The assembly language control routines enable the heaters to be turned on for multiples of 0.016 sec up to 4.25 sec. The amount of time the heaters are on during the 4.25 sec period is computed by the BASIC program. The computation of the fraction of the total period (duty cycle) is done using the following nonlinear finite difference equation:

$$D_i = \bar{D}_i + A_1\ \tau i + A_2\ (\tau i - \tau i\text{-}1) + B_1\ \tau i/(B_2\ \tau i\text{-}1)^2\text{-}1) \qquad (1)$$

where, i - discrete control time,

D_i = new duty cycle,

$\bar{D}_i$ = weighted average of the 5 previous duty cycles, i.e.,

$\bar{D}_i = (1/9)*D_{i-5} + (2/9)*D_{i-4} + (3/9)*D_{i-3} + (2/9)*D_{i-2} + (1/9)*D_{i-1}$,

τi = deviation of temperature from the control temperature at time i in mv,

τi -1 = deviation of the temperature from the control temperature at time i-1 in mv,

A_1, A_2 = first and second order estimates of duty cycle per deviation from the control temperature in duty cycle/mv, and

B_1, B_2 = stabilizing coefficients for nonequilibrium approaches to the control temperatures in duty cycle/mv.

The new duty cycle is computed by equation (1) after each BASIC scan and limited to a minimum duty cycle of 0 sec (heater always off) and a maximum duty cycle of 4.25 sec (heaters always on).

The steady state ambient temperatue anywhere in the chamber is controlled within ± 2.5°C for a 35°C range between 5° and 40°C when the outside temperature varies between 4° and 32°C. The precision increases to ± 0.2°C for a limited temperature range of 15-35°C with outside temperature varying between 20° and 30°C. Similarly, the SPAR units response to a 24-hours sinsoidal-controlled

temperature change of 28°C (between 10° and 38°C) can be programmed and obtained with a precision of ± 0.5°C to simulate a diurnally changing environment. This was achieved by merely modifying the temperature control routine in BASIC to compute a new control temperature after each BASIC scan using the function:

$$T - T_{min} + (T_{max} - T_{min}) \sin (h-t)$$

where T_{min} = minimum temperature for the day in °C,

T_{max} = maximum temperature for the day in °C,

h = time in hours,

t = time minimum temperature is to occur in hours.

Figure 9 shows a typical temperature response of a SPAR unit to this control algorithm when the ambient temperature varies between 18.5 and 31°C (Parsons et al., 1978). Similarly, the system response to temperature step changes were described by Parsons et al. (1978) and the results indicate that even for a drastic change in control temperature of 10°C, the system had totally recovered to ± 0.5°C in 6 min. For a step change of 2°C, the time required for reaching equilibrium was less than 2 min. This performance resulted from a combination of all the modifications implemented.

Humidity control is achieved by injecting water vapor into the duct after the air has been heated. The injection rate of the water is similarly to the heater control techniques, using a duty cycle to simulate proportional control. Tests on use of this method for controlling relative humidity indicate that a high initial injection rate produces rapid changes in relative humidity. After 1 to 2 min, the changes in relative humidity are much slower. Therefore, an algorithm to take this into account is used (Parsons et al., 1978).

The equation to compute the water injection time for humidity control is:

$$T_H = T_n + K_1 E_n + K_2 (E_n - E_{n-1})$$

where

T_H = injection time for the next sample interval in sec,

T_n = integrated water injection time over the previous five sample periods in sec,

K_1 = proportionality constant for the absolute error from the control point in sec per percent relative humidity,

E_n = error from the control point at time n, and

K_2 = proportionality constant for the rate of change of the error.

The CO_2 level in each of the three SPAR units is sampled once per minute for 20 sec and measured electronically using one infrared gas analyzer. The measured CO_2 level is used to calculate the amount of CO_2 needed after the gas law corrections for temperature and pressure (Phene et al., (1978). The algorithm for CO_2 control was implemented in the BASIC program. This algorithm turned the CO_2 on for 0, 1, 2 or 3 periods of 20 sec, based on the absolute deviation from the CO_2 control level. For this algorithm the absolute deviation was compared to control ranges corresponding to the four possible time intervals. The standard deviations from the mean control level of 320 ppm, and the integrated solar radiation are presented in Table 1 for representative 15 min output periods. These data, ranging from 5.4 to 10.6 ppm, were obtained on Julian Date 119, 1978 with a full canopy of winter wheat. This method of CO_2 control requires critical monitoring and selection of the CO_2 flow rate being added to the SPAR units since the minimum input period is 20 sec. Parsons et al. (1978) proposed implementation of a shorter CO_2 input period and outlines a new CO_2 control algorithm which has good potential for further improving the CO_2 control of the SPAR units.

The microcomputer-based SPAR system has proved to be technically feasible. The use of the microcomputer provided software flexibility, interface simplicity but also hazards associated with system failure. Because of the high probability of electronic failure, system mechanical control redundancy is necessary; however, because of the low cost of microprocessor hardware, a back up unit can be kept on line or at least available for immediate replacement of defective parts. Initial software development is at least as expensive as hardware development, but software modification is much easier than hardware modification. Interface simplicity, achieved because of computer complexity, is a highly desirable quality in a system that is subject to modification and maintenance. The complexity of the microcomputer itself is offset by several factors: microcomputers are reliable; they are field repairable at the component level; components are easily obtained at comparatively low prices so that a spare parts inventory could be kept at minimum cost.

Future Plans

The initial testing of the SPAR units indicated that this naturally sunlit system provides a precisely controlled soil and aerial environment for plant growth in which accurate and rapid measurements can be obtained. Dependence of these growth rates on variable incoming energy indicates the necessity for rapid and continuous measurements of soil-plant-atmosphere processes to understand plant response to the environment and to apply these results to develop and validate dynamic simulation models. These facilities make possible the most sophisticated studies in applied whole-plant physiology.

During the first 2 years of their operation, the effect of moisture stress on photosynthetic efficiency of mature cotton was measured and the potential root growth under non-limiting photosynthate production (dry matter accumulation in time and space) was determined for cotton. These data will provide base values for root growth in the simulation model, GOSSYM, to which reduction factors will be applied for soil moisture stress, soil strength, and limiting supplies of oxygen, nitrogen, and carbohydrate. In 1978, during the implementation of the modified system, the effect of 3 temperature regimes on morphogenisis and growth of wheat was studied.

In the future, we will conduct a large variety of experiments to supply whole-plant quantitative data relating the various physical and physiological processes in cotton, corn, wheat, and soybeans and these (Via models) may provide a better understanding of the environmental impact on crop yields.

References

1 Baker, D. N. 1965. The effects of certain environmental factors on net assimilation in cotton. Crop Sci. 5:53-56.

2 Baker, D. N. 1966. Microclimate in the field. TRANSACTIONS of the ASAE 9:77-81, 84.

3 Curry, R. Bruce. 1971. Dynamic simulation of plant growth Part I. Development of a model. TRANSACTIONS of the ASAE 14:946-49, 59.

4 Dunlap, J. L., J. M. McKinion, J. E. Parsons, C. J. Phene, J. R. Lambert, and D. N. Baker. 1978. Microprocessor-based data acquisition and control hardware for the SPAR system. Paper #78-5544, Winter Meeting ASAE, Chicago, Ill.

5 Hesketh, J. D., McKinion, J. M., Jones, J. W., Baker, D. N., Lane, H. C., Thomson, A. C. and Colwick, R. F. Problems in Building Computer Models for Photosynthesis and Respiration. Cotton Production Research, Agricultural Research Service, U.S.D.A., P. O. Box 5367, Mississippi State, Mississippi, U.S.A.

6 Hoffman, G. J., C. J. Phene, and S. L. Rawlins. 1969. Microchamber for studying plant response to environmental factors. TRANSACTIONS of the ASAE 12(4):598-601.

7 Jarvis, P. G. and Slatyer, R. O. 1966. A controlled-environment chamber for studies of gas exchange by each surface of a leaf. Division of Land Research Tech. Paper No. 29, Commonwealth Scientific and Industrial Research Organization, Melbourne, Australia.

8 Koller, D. and Samish, Y. 1964. A null-point compensating system for simultaneous and continuous measurement of net photosynthesis and transpiration by controlled gas-stream analysis. Botan. Gaz. 125:81-88.

9 Moss, D. N. 1963. The effect of environment of gas exchange of leaves. In stomata and water relations in plants, Israel Zelitch, ed., Conn. Agr. Exp. Sta. Bul. 664, New Haven, CN.

10 McKinion, J. M., C. J. Phene, and J. E. Parsons. A microcomputer-based data acquisition system for meteorological measurements. AGRICULTURAL ENGINEERING 59(3):22-23.

11 Parsons, J. E., J. L. Dunlap, J. M. McKinion, C. J. Phene, and D. N. Baker. 1978. Microprocessor-based data acquisition and control software for the SPAR system. Paper No. 78-5545, Winter Meeting ASAE, Chicago, Ill.

12 Phene, C. J., D. N. Baker, J. R. Lambert, J. E. Parsons, and J. M. McKinion. 1978. SPAR - a soil-plant-atmosphere research system. TRANSACTIONS of the ASAE. 21(5):924-930.

References (continued)

13 Phene, C. J., G. J. Hoffman, and S. L. Rawlins. 1971. Measuring soil matric potential in situ by sensing heat dissipation within a porous body: I. Theory and sensor construction. Soil Sci. Soc. Amer. Proc. 35:27-33.

14 Phene, C. J., S. L. Rawlins, and G. J. Hoffman. 1971. Measuring soil matric potential in situ by sensing heat dissipation within a porous body: II. Experimental results. Soil Sci. Soc. Amer. Proc. 35:225-229.

15 Phene, C. J., G. J. Hoffman, and R. S. Austin. 1973. Controlling automated irrigation with soil matric potential sensor. TRANSACTIONS of the ASAE 16:773-776.

Table 1: Standard deviation from the mean control level (320 ppm) under different radiation loads for a full canopy of winter wheat (JD 119). Based on 15 observations from a 15-minute period (Parsons et al., 1978).

SPAR	Standard Deviation (ppm)	Incoming Radiation (W/m^2)
A	6.7	732.4
C	10.6	732.4
A	7.5	676.6
B	6.7	676.6
C	9.3	676.6
A	9.3	788.2
B	8.7	788.2
A	10.6	809.1
C	5.4	809.1
A	9.6	823.1
B	9.8	823.1
C	7.7	823.1

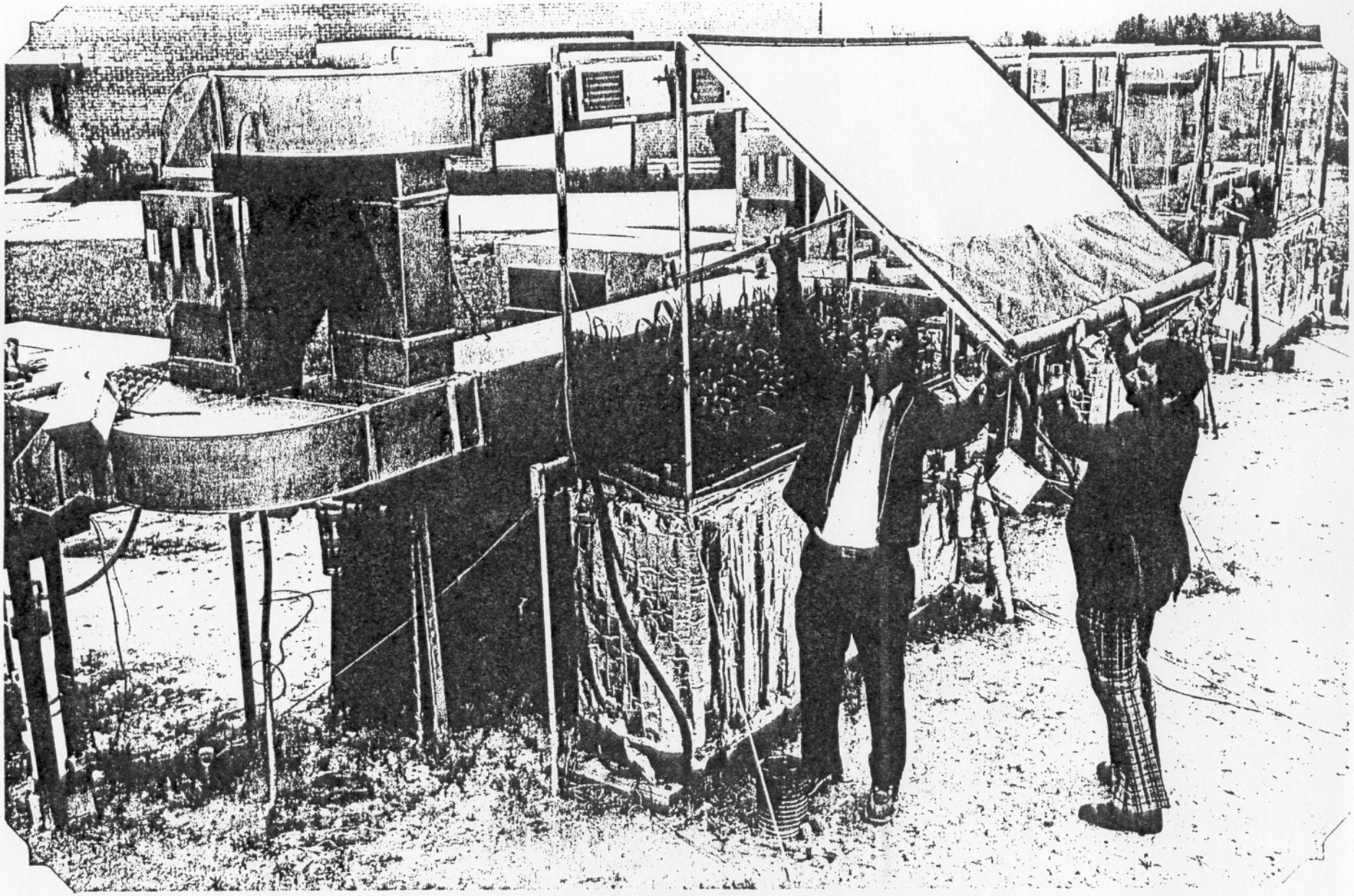

Figure 1. Modified SPAR units at USDA-SEA-AR, Florence, S.C.

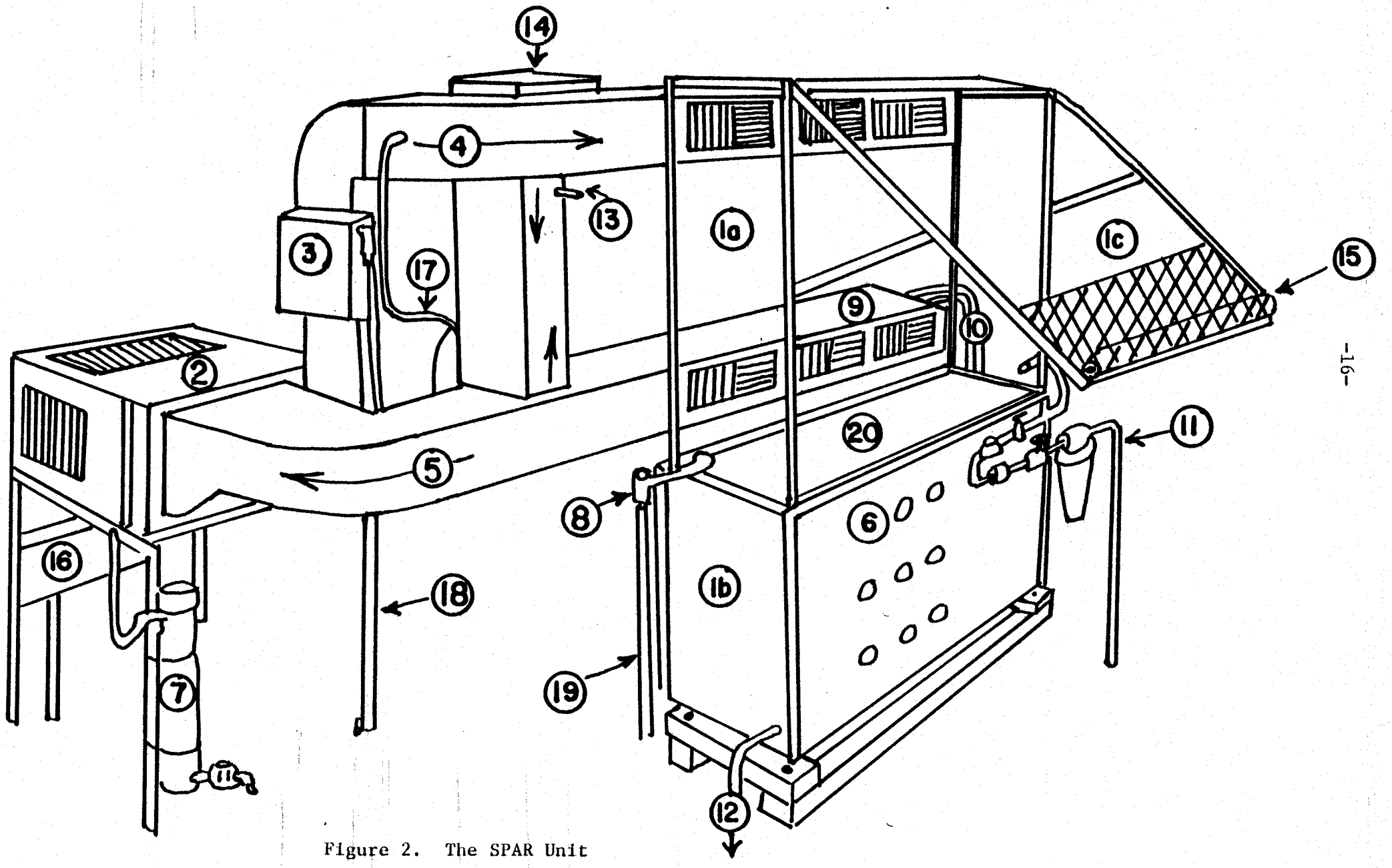

Figure 2. The SPAR Unit

NOMENCLATURE FOR FIGURE 2.

1. SPAR Unit
   a. Upper Plexiglas chamber
   b. Steel soil bin
   c. Hinged door
2. Air conditioner
3. Heater
4. Air ducts (inlet)
5. Air ducts (outlet)
6. Soil matric potential sensors Access ports
7. Transpiration measuring system
8. Shielded wires for electrical connections
9. Vacuum pump (inside duct)
10. Underground plastic tube for air samples
11. Automatic irrigation system
12. Drainage outlet
13. Equalizing baffle
14. Humidifier
15. Plastic shading screen
16. Power switch box and breakers
17. CO_2 injection tube
18. Air conditioner stand
19. Window with wiregrid for root measurement
20. Soil

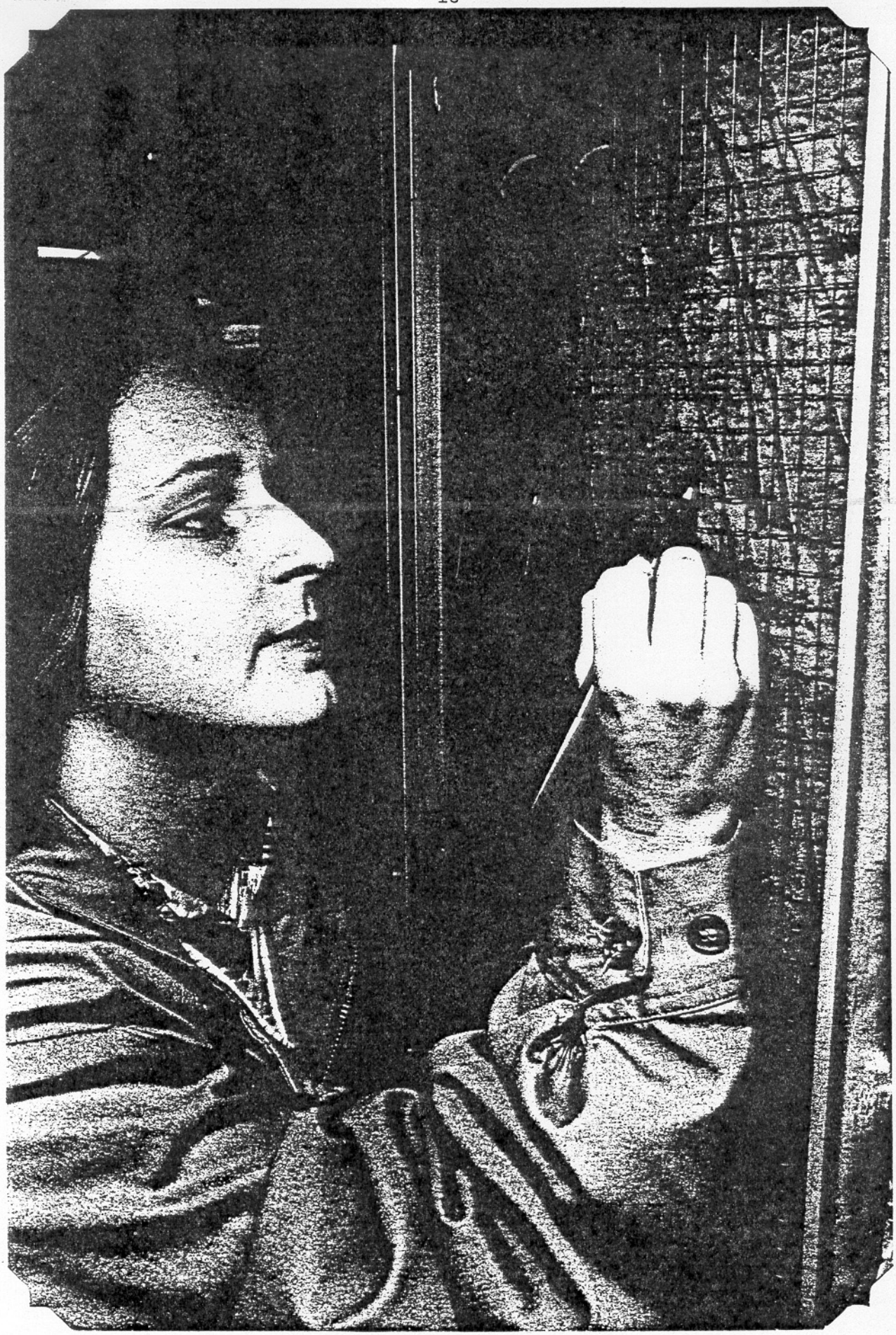

Figure 3. Technician Measuring Root Growth Along the Gridded Soil Bin Window.

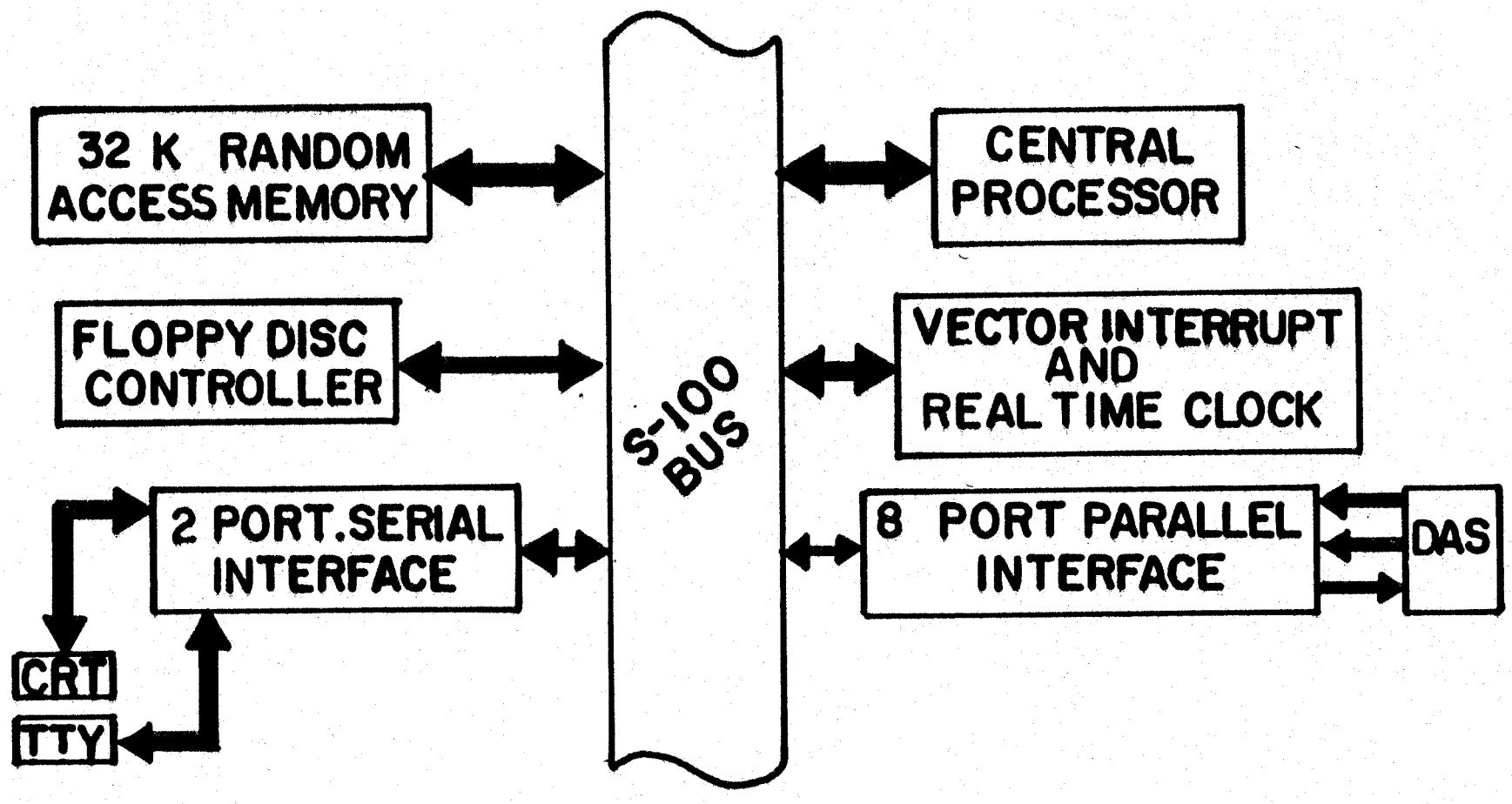

Figure 4. Microcomputer Architecture (Dunlap et al., 1978)

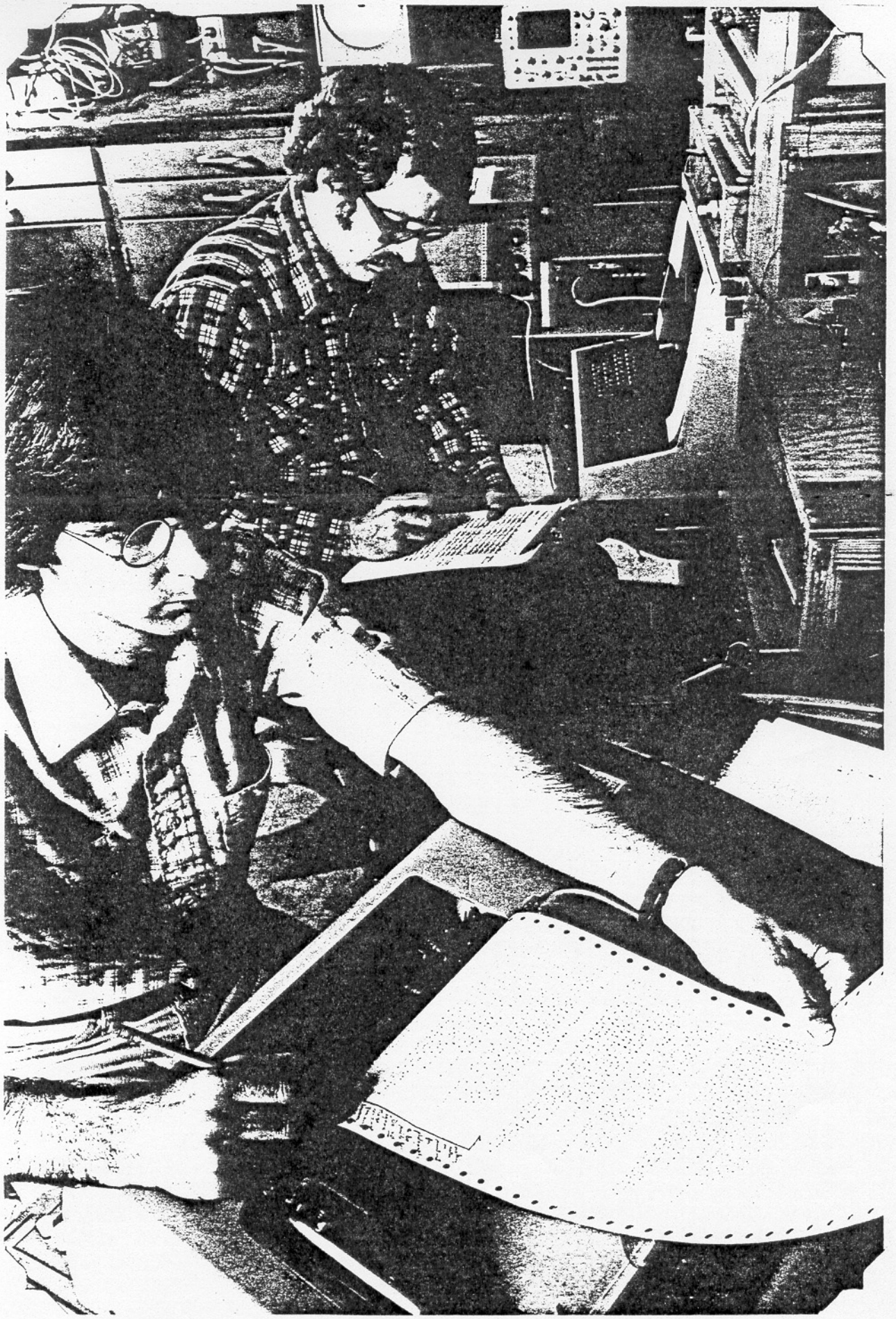

Figure 5. Mr. J. E. Parsons (top) and Mr. J. L. Dunlap (bottom) are evaluating the system performance during a test.

Figure 6. Mr. Parsons (right), Dunlap (rear), and Phene (front) in process of calibrating the CO_2 measurement and control system.

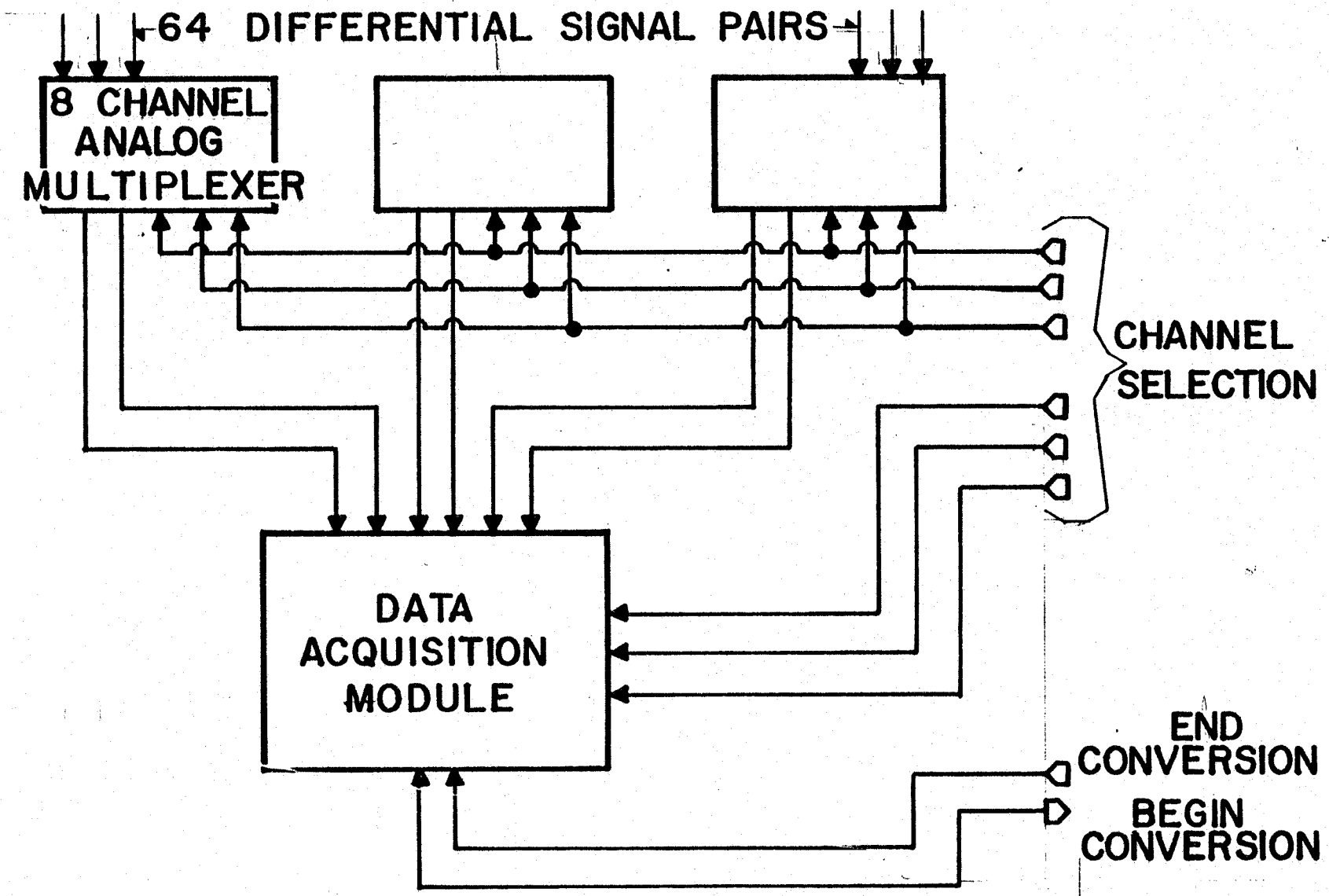

Figure 7. DAS Architecture (Dunlap et al., 1978)

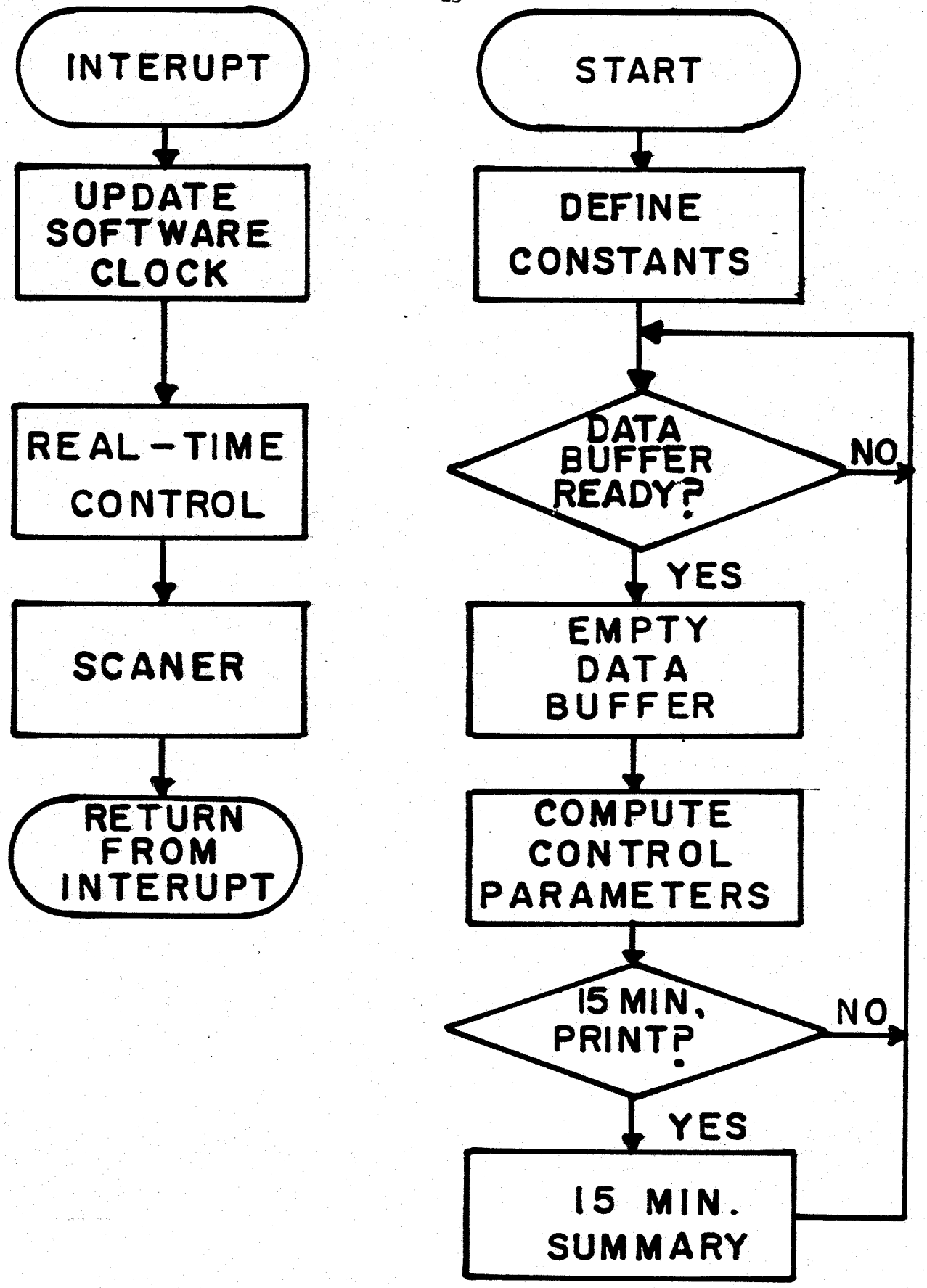

Figure 8. Flow charts of the interrupt service program (assembly language) and the BASIC program.

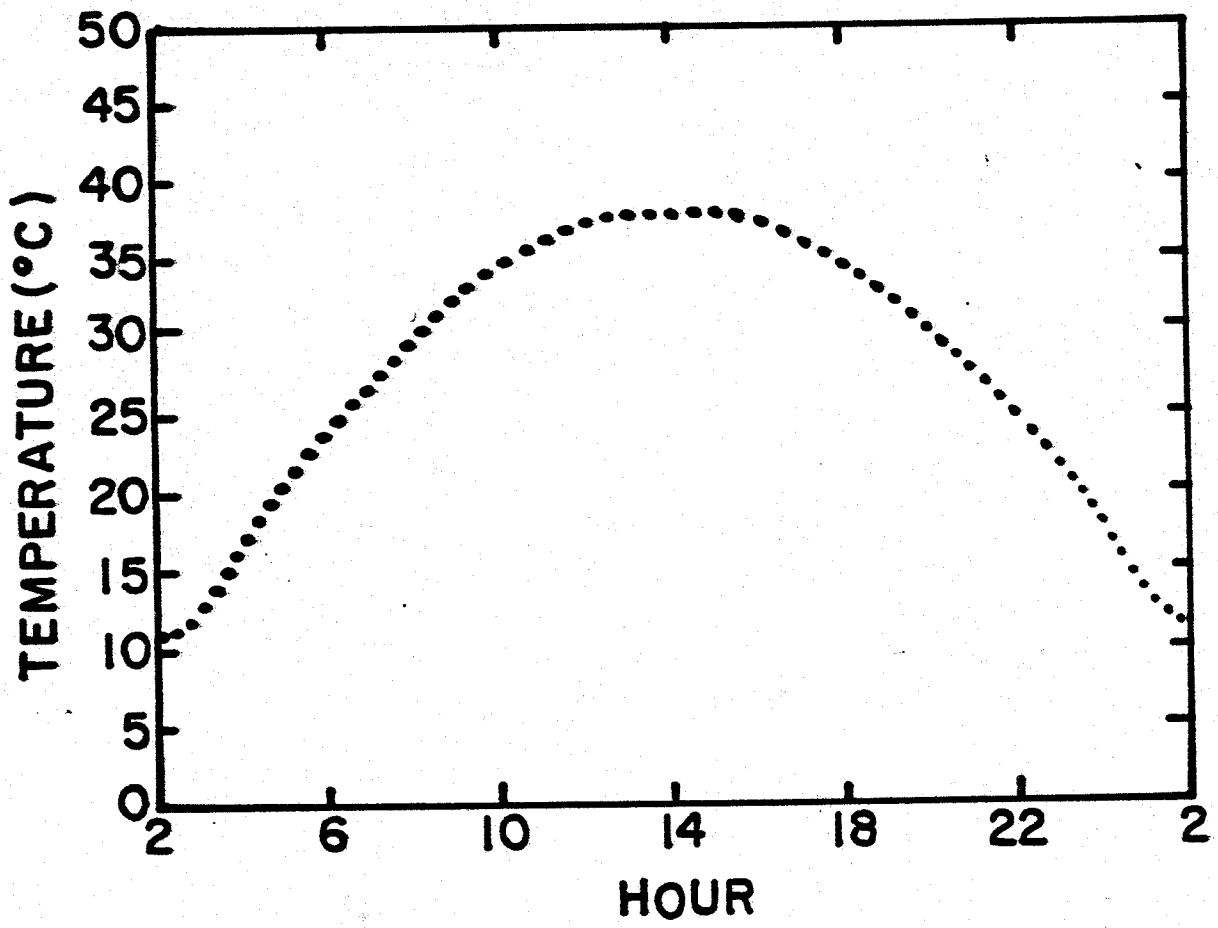

Figure 9. Response of the temperature control algorithm to sinuousoidally changing control temperatures (Parsons et al., 1978).