Using the Microcomputer in Meteorological Measurements

James M. McKinion *Assoc. Member ASAE*
C. J. Phene *Assoc. Member ASAE*
John Parsons

THIS microcomputer system is based on the Mits Altair 8800A Microcomputer (1) which is used to make micrometeorological measurements from thermocouples, incident and net radiometers, percent relative humidity sensors, thermopiles, and other commonly used climatological transducers. The system also records events-length of contact closure. The primary acquistion program is written in assembly language; however, all routines for data manipulation, converting to engineering units, linearization, and output are written in BASIC. The data acquisition system is in Fig. 1.

The Mits ALTAIR microcomputer consists of the Intel 8080A microprocessor, 12K bytes of random access memory, serial interface for a teletype, 32 bits of parallel input/output (IO) arranged as four parts of 8 bits, and a vector interrupt with a 10 m sec real-time clock (2).

Signal input is handled by a relay multiplexer and a voltage-to-frequency converter. The analog signals recorded are low-level signals requiring normal precautions to preserve accuracy-shielded transducer cables, low-thermal relays, and a high-quality A/D converter.

Three-pole magnetically shielded James relays (Model C6201) were used for the relay multiplexer. These relays have exceptional low-thermal characteristics, short contact bounce time, and a rated mean time between failure of closure of over 1 billion operations. Hewlett-Packard 2212A VFC converts the millivolt low-level signals from analog to digital form. A 16-bit ripple converter accumulates pulses for the measurement period. The A/D converter consists of the VFC and the counter.

Each channel is sampled for 20 m sec/channel per scan with 10 m sec/channel provided for contact bounce and VFC settling time. Each 16-channel scan, at 30 m sec/channel, requires 480 m sec. Data for each channel can be accumulated into the 3 bytes of data in computer memory. These are needed to store the counts for the entire 15-min period to insure there is no overflow at full scale input to the VFC. As each channel of data is acquired, the data present at two ports of the parallel I/O interface is added to the cumulative data in memory, thus performing integration or averaging. This integration was carried for a 15-min period of 1875 measurements/channel.

At the end of each 16-channel scan, the third part of the parallel I/O was checked by the computer to measure events, giving the capability of checking eight events. The resolution of each event channel is ± 480 m sec, adequate for our needs. The relays in the contact sense circuit allowed for system and noise isolation for measuring events. The event byte is read into the computer. For each byte that is true, a count is added to the appropriate memory location to signify that during the 480-m sec scan an event has occurred. Thus for each count accumulated, the event was occurring for 480 m sec. These channels are used mainly to record the length of time for metering gases such as CO_2.

Data is processed every 15 min through an ASR 33 Teletype. Both printed paper and punched paper tape outputs are recorded.

Software Design

The Altair microcomputer system with 12K bytes of memory is furnished with a system monitor, assembler, debug routine, and 8K BASIC. All data manipulations and output are handled in BASIC. Thermocouple channels were linearized for copper-constantan thermocouples. Percent RH channels were linearized for relative humidity sensors. All integral and event measurements were then converted to engineering units and printed on the Teletype along with time-of-day and a channel identification number.

The data acquisition program was written in assembler language. The Altair BASIC provides for a vector interrupt to memory location 70 (octal). The user can place a jump-to-user-written assembler program at this location. The assembler program for data acquistion was placed in high memory because the 8K BASIC interpreter requires about the first 6K bytes of memory. The BASIC program for data manipulation and output is immediately above the BASIC interpreter—thus the need for locating the program in high memory to prevent the user-written BASIC program from overflowing into the assembler program. At initialization time, the

James M. McKinion is an electronics engineer at the Cotton Production Unit, Mississippi State, MS. C. J. Phene is a soil scientist (physics) at the Coastal Plains Soil & Water Conservation Research Laboratory at Florence, SC and John Parsons is a mathematician there. *This is a contribution of the Cotton Production Research Unit and the Coastal Plains Soil & Water Conservation Research Laboratory in cooperation with Mississippi State University and Clemson University. Mention of a product name does not imply official endorsement by USDA.*

BASIC interpreter checks for available memory and sets each byte to zero to determine the number of free bytes for program space. The assembler program starts at location 12000 (octal). Converting the entire assembler program to machine language takes less than 600 bytes of memory. Flow charts describing the initial start up, data acquisition, and event sensing assembler program are shown in Fig. 2.

Data Acquired

The data acquisition system was used to collect data from a set of three closed environmental chambers (SPAR system, (3) with cotton and soybeans. These variables were recorded: outside air temperature (shelter temp) air temperature inside each chamber (SPAR temp), soil temperature in each chamber, incident solar radiation (RI), net solar radiation (RN), temperature of CO_2 being metered to each chamber (Rotameter temp), temperature of a selected leaf in each chamber (leaf temp), relative humidity in each chamber (RH), and tenth of seconds of CO_2 metered to each chamber (CO_2 sec).

System accuracy was determined by inputing a 1.000 mV signal from a Leeds & Northrup Millivolt Potentiometer into a single channel over a 15-min integration period. The basic accuracy of the Hewlett Packard VFC is $\pm 0.01\%$ of full-scale input of 10 mV. Zero drift is ± 5 V referred to input and linearity is $\pm$ 0.01% of full scale. The temperature coefficient per °C is $\pm$ 0.017 % of full-scale input. By sampling each channel over a 15-min period and performing signal averaging within the computer numerically, the overall system accuracy was determined to be $\pm 0.05\%$ of full-scale input.

These data acquisition procedures require about 10 to 20% of available CPU time. Thus computing power is still available for other uses such as process control, sensor monitoring, and error checking.

At least as much time must be allowed for designing software and debugging the software as for designing the hardware. The flexibility of changing data manipulation statements in a high level language such as BASIC is a strong system advantage. Scientists unfamiliar with assembler language could write statements to convert data into proper engineering units or to linearize data from transducers. Because all constants determining the number of channels scanned, the length of the integration period and the number of event channels have been written in BASIC and stored by BASIC into memory locations used by the assembler program, a scientist familiar with only BASIC could easily control the data acquisition system.

The decision to use a relay multiplexer and a voltage-to-frequency converter for the front end of the data acquisition system was mandated by the fact that these were already integrated and available in an older system. The system achieved an overall accuracy of $\pm 5\ \mu$ V based on an integration period of 15 min.

The low cost of this system is another advantage. The Altair computer, teletype, and an equivalent front end should cost under $4000. Additional relays and counter stages can provide an inexpensive, flexible and expandable system.

Because technology is rapidly changing with the advent of microprocessors and microcomputers, data acquisition modules now are available. Only minor hardware changes are required to utilize systems such as the Burr-Brown SDM 853, a complete 8-channel differential solid-state multiplexer, instrumentation amplifier, sample- and hold amplifier, and 12-bit A/D converter in a single circuit module.

With the combination of low-cost computers and low-cost data acquisition, the major user effort is in programming the data acquisition/control system. ■

References

1 Ogdin, Jerry L. 1976. Microprocessors have their problems too, Instruments and Control Systems 49(8):35-39.

2 Weissberger, Alan J. 1975. Application ideas for microprocessors, Instruments and Control Systems 48(10):19-24.

3 Phene, C. J., D. N. Baker, J. R. Lambert, J. E. Parsons, and J. M. McKinion. 1977. SPAR—a soil-plant atmosphere research system. TRANSACTIONS of the ASAE. In press.

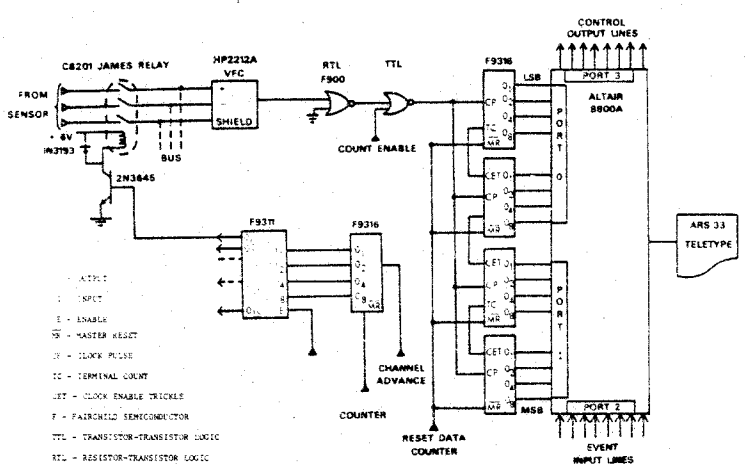

FIG. 1 Schematic of microcomputer-based data acquisition system

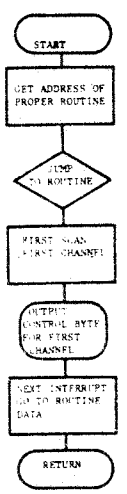

FIG. 2 Flow chart of initial start-up assembly program. When each 10 m sec interrupt occurs, the computer jumps to the data acquisition routine, where all registers are saved. At return time, all registers are restored