Controlling Automated Irrigation With Soil Matric Potential Sensor

C. J. Phene, G. J. Hoffman, R. S. Austin
MEMBER
ASAE

EFFICIENT irrigation management requires both knowledge of soil water potential and the capability to control it to achieve optimum water conditions for plant growth. The effect of soil water potential on plant growth is well known and has prompted researchers to develop automated irrigation systems. The application of soil-water control devices to these systems has had varying success.

Waugh and Corey (1963), Hanan and Langhans (1964), and Painter (1966) devised methods by which plants could be grown in a greenhouse at nearly constant soil water contents, but their methods have serious limitations that discourage field application. Fischbach et al (1970) designed controls for an automatic surface irrigation system using tensiometers to sense the matric potential and initiate irrigation. However, the inherent disadvantages of the tensiometer for measuring soil matric potential caused some difficulty. Tensiometers are limited to a functional soil matric potential range of about 0 to -0.8 bars. The soil matric potential under field conditions will frequently drop below -0.8 bar, especially near the top of the soil profile. Pressure transducers have been adapted to tensiometers to provide pneumatic or electrical signals, but lack of sensitivity to small pressure changes is a limitation.

The soil matric potential is an important index of the water available to plants. Since availability of soil water governs plant growth, any device that can sense the soil matric potential in situ and that also has an electrical output signal can be used to control irrigation equipment automatically. An effective sensor should have a high sensitivity in the soil matric potential range of interest, its calibration should be stable, and its output should not be affected by the changes in soil temperature.

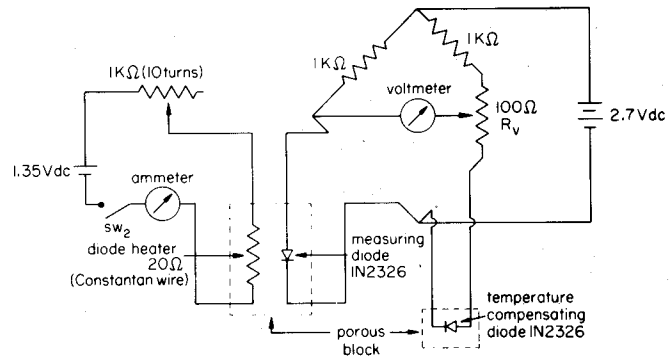

FIG. 1 Measuring circuit for temperature-compensated matric potential sensor.

Phene et al (1971) developed a matric potential sensor that operates on the principle of heat dissipation rate in a porous block. It is sensitive over a wide range of soil matric potentials and has an electrical output that can be used for controlling irrigation systems automatically. Phene has improved the design and construction of the original sensor by use of a commercial heater (Minco, thermofoil heater 20Ω*, and the selection of ceramics with bubbling pressure of 0.3 bar (Selas flotronic, grade no. 10) to improve the sensitivity of the sensor between the 0 and -2 bars soil matric potential†. The stability of the calibration curve is greatly improved by use of ceramic material instead of gypsum for the porous block. The ceramic provides a chemically and structurally stable matrix. The sensitivity range of the matric potential sensor can be determined by selecting the pore size distribution of the porous block.

Errors caused by temperature fluctuations in the soil are compensated by locating a matched diode in the soil and by placing it in the electrically adjacent leg of the measuring Wheatstone bridge, as shown in Fig. 1 (Phene et al (1971).

The use of this sensor for initiating irrigations and controlling the soil matric potential under laboratory and field conditions is described in this paper.

IRRIGATION CONTROL

The soil matric potential sensor, described in detail by Phene et al (1971), either can be interrogated manually, interfaced with a computerized data acquisition system, or simply connected to a servo-balanced bridge and a cam-timer for automatic irrigation control. In the laboratory experiments, the output voltage from a voltmeter activated a silicon controlled rectifier (SCR) which controlled water application. This circuit diagram is given in Fig. 2a. In the field test, the voltmeter output from the Wheatstone bridge (Fig. 1) activated an electronic relay meter (International Instruments model 2548 with power pack module no. 4000-213) controlling the irrigation water supply. This circuit is shown in Fig. 2b.

A simple adjustment of the bridge voltage in the laboratory circuit (Fig. 2a) started irrigation at any desired point within the range of the matric potential sensor. In these experiments, matric potential readings were recorded simultaneously by a data acquisition system, but a cam timer and recorder would provide an irrigation record. To irrigate automatically, the potentiometer, R_v, of the bridge shown in Fig. 1 is adjusted before heating so that the bridge voltage is positive and equal to the sensor voltage corresponding to the

Article was submitted for publication on December 1, 1972; reviewed and approved for publication by the Soil and Water Division of ASAE on March 16, 1973. Presented as ASAE Paper No. 71-230.

The authors are: C. J. PHENE, Physicist, Coastal Plains Soil and Water Conservation Research Center, P. O. Box 3039, ARS, USDA, Florence, S. C.; G. J. HOFFMAN, Research Agricultural Engineer, and R. S. AUSTIN, Electronics Technician, U.S. Salinity Laboratory, ARS, USDA, Riverside, Calif.

*Company names are included for benefit of the reader and do not imply any endorsement or preferential treatment of products listed by the U.S. Dept. of Agriculture.

†Phene, C. J. (in preparation) Improvement of the thermal soil matric potential sensor.

This article is reprinted from the TRANSACTIONS of the ASAE (Vol. 16, No. 4, pp. 773, 774, 775, 776, 1973)
Published by the American Society of Agricuutural Engineers, St. Joseph, Michigan

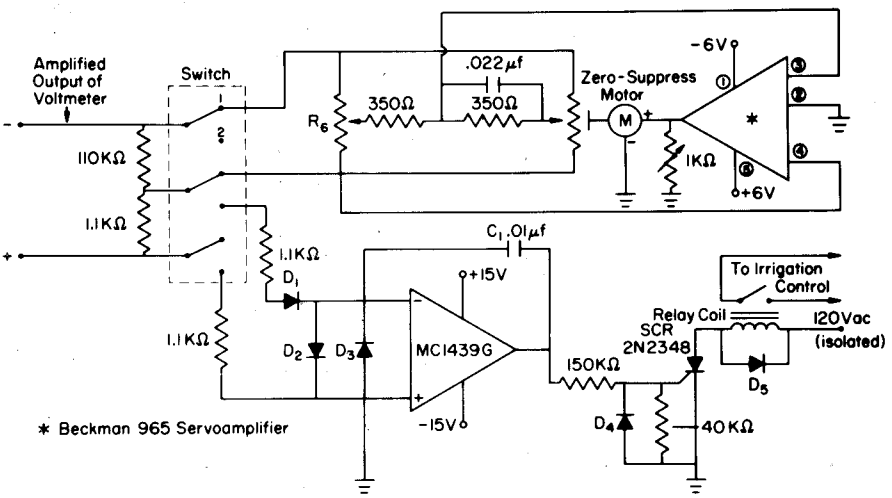

FIG. 2a Electronic circuit used for adjusting Wheatstone bridge voltage and activating irrigation in the laboratory tests.

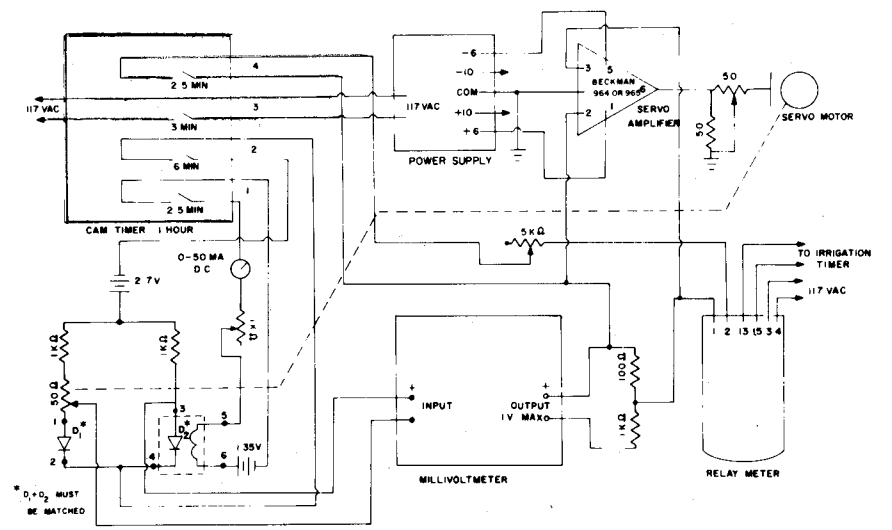

FIG. 2b Electronic circuit used for adjusting Wheatstone bridge voltage and activating irrigation in the field test.

matric potential at which irrigation is desired. After the required brief heating cycle, if the bridge voltage is zero or greater, no irrigation will occur; if it is less than zero, the irrigation system will be turned on. For example, if an irrigation is desired when the soil matric potential drops below -2 bars, and -2 bars corresponds to a sensor voltage of 1 mv, R_v is adjusted so that the microvoltmeter normally reads +1 mv prior to heating the sensor. The high impedance voltmeter amplifies the bridge voltage to 10-v d-c full scale, and the output of the voltmeter becomes the input voltage to the operational amplifier (Fig. 2a). When the voltage of the bridge passes zero, the operational amplifier output switches from -15 to +15-v d-c and drives the SCR that activates a relay. The irrigation cycle was controlled by using the relay to switch on an adjustable cam timer that, in turn, activated an irrigation valve to apply a known volume of water.

Normal electrical drift from the bridge voltage set to control irrigation can be automatically offset by using a servo-controlled potentiometer in place of the zero-suppress potentiometer in the voltmeter shown in Fig. 2a. If the initial output voltage of the diode bridge has drifted, a voltage imbalance will be created in the servo system, and the servo amplifier will drive the zero-suppress potentiometer in the voltmeter to restore the balance in the bridge. This automatic zero adjustment is made only between matric potential sensor measurements. During a measurement, the servo control is disconnected by automatic switching to position 2 as shown in Fig. 2a. Once the initial bridge voltage is set for a given value, it will remain constant.

The control circuit for the field test is shown in Fig. 2b. In this circuit, a one-hour cam timer turns the power on to the bridge (cam no. 2) and to the power supply (cam no. 3), which provides ±5-v d-c to the servo amplifier. If the bridge voltage output is not zero, the servo potentiometer will monitor and restore the required initial null condition of the bridge. When the bridge output voltage has been adjusted to zero, the servo system is disconnected and the electronic relay meter is turned on (cam no. 4) simultaneously with the diode heating circuit (cam no. 1). The heat applied to the diode creates a change in voltage and an unbalanced condition in the bridge, causing the electronic control meter to deflect from zero. The magnitude of the deflection is a function of the matric potential of the porous body. When the deflection exceeds the adjusted irrigation control set point of the electronic control meter, solenoid relays are activated initiating an irrigation. The electronic control meter used (Fig. 2b) has two independent set points that can be adjusted to different voltages corresponding to two different soil matric potentials. Either one or both of these set points can be used to control the irrigation timing device. In the field experiment, the two set points were used to control the soil matric potential of two field plots at two different matric potential levels.

In both circuits, voltage drift resulting from diurnal temperature changes can be decreased by matching voltage-temperature characteristics of the two diodes (D_1 and D_2 in Fig. 2a and 2b) and by using precision resistors for the bridge. If the sensor leads are long and exposed to large temperature changes, then simply matching the resistance of the diode and heater lead wires will improve performance.

EVALUATION PROCEDURE

Laboratory tests of the soil matric potential sensor were conducted in a microclimate chamber described by Hoffman et al (1969). A matric potential sensor, consisting of two matched diodes embedded in white Castone, (Casting Material, Ransom and Randolph Co., Toledo, Ohio), was placed 8 cm deep in a Pachappa sandy loam soil column 29 cm in diameter and 31 cm high, in which alfalfa (*Medicago sativa L.*) was growing. When called for by the matric potential sensor, the soil column was irrigated with 300 ml of water applied at the soil surface to maintain specified matric potential levels. The ambient and dewpoint tempera-

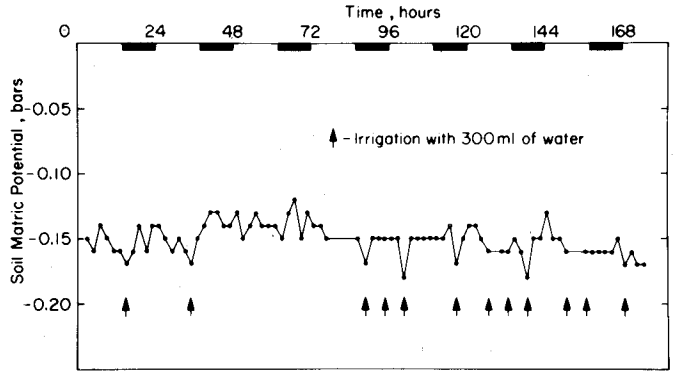

FIG. 3 Soil matric potential measurements when the system irrigated at –0.15 bars and air temperature cycled.

tures of the chamber were initially 25 and 21.5 C, respectively. The system was successfully tested in the laboratory under simulated field temperature fluctuations as well as at a constant temperature in three parts: (a) the soil matric potential controlled at -0.15 bar for 7 days while the chamber temperature was cycled daily by manually adjusting the air temperature to 31 C at 8 a.m. every morning and changing it back to 25 C at 5 p.m., (b) the chamber temperature held at 25 ± 0.2 C and the soil matric potential held at –0.15 bar for 5 days, and (c) the chamber temperature held constant for 11 days at 25 ±0.2 C, and an irrigation initiated when the soil matric potential was -7.0 to -8.0 bars. No attempt was made to control the matric potential within a very narrow range, since this would have necessitated repositioning the sensor and improving the water distribution system as the plants developed.

Field tests were conducted in two plots (7.5 by 6 m) of Marlboro sandy loam soil, near Florence, South Carolina. A temperature-compensated matric potential sensor, constructed of a high porosity ceramic, was installed at the 15-cm depth at the center of each plot. Four nonirrigated plots were used as check plots. Sweet corn *(Zea mays L.,* Florida 104 variety) was planted in rows spaced 102 cm apart at the rate of 1 seed per 30 cm. A porous Viaflow (spunbonded polyolefin irrigation tube, E. I. DuPont De Nemours, Wilmington, Del.) irrigation tube was buried in the soil, 3 cm below the surface and 5 cm away from the center of each corn row. Irrigation solution containing plant nutrients was applied through the irrigation tube at the rate of 0.2 ml per cm per min for 8 min when the sensor called for an irrigation.

Every two hours the soil matric potential was monitored automatically and recorded for both plots. When the soil matric potential reached -0.15 bar or less in one plot, and -0.25 bar or less in the other plot, the irrigation system was turned on. The soil matric potential, the number of irrigations, and the daily volume of water applied were recorded for each plot for the duration of the experiment. Tensiometers, installed 15 cm deep in the center row of the irrigated plots, 50 cm from each soil matric potential sensor, and in some adjacent nonirrigated plots, were read daily at 4 p.m.

RESULTS

Laboratory results showing the sensitivity of automatic control of soil matric potential with the sensor are given in Figs. 3, 4 and 5. In each figure, the dark portion of the photoperiod is shown by a heavy black line on the upper abscissa and irrigations are denoted by arrows below. As the alfalfa grew, more frequent irrigations were required. In part (a) of the laboratory experiment, Fig. 3, the mean and standard deviations for all the soil matric potential measurements were -0.15 ±0.01 bar. The range was 0.05 bar. Near soil saturation and under the fluctuating temperature conditions tested, the matric potential sensor is accurate within 10 percent of the measurement. Fig. 3 also shows that the sensor performed well within its expected accuracy and that the irrigations were applied only as needed to maintain the soil matric potential in a narrow range around –0.15 bar.

In part (b) of the laboratory experiment (Fig. 4) with a constant temperature, the mean and standard deviations of the soil matric potential measurements were -0.12 ±0.04 bar. The range was 0.10 bar.

The measurements obtained for part (c) of the experiment, at constant temperature and low matric potential, are shown in Fig. 5. In the -7-bar range, the matric potential sensor is accurate within 15 percent of the measurement. Excluding the single irrigation applied by a malfunction in the system in the 169th hour of the experiment, the mean and standard deviations for the soil matric potential measurements at which the irrigations were initiated were -7.6 ±0.5 bars.

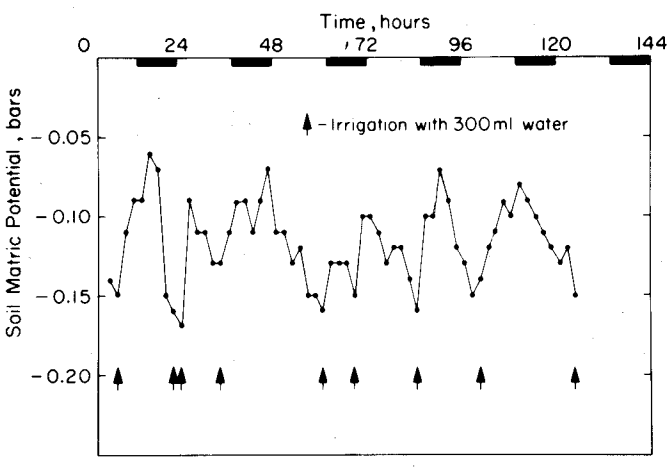

FIG. 4 Soil matric potential measurements when the system irrigated at –0.15 bar under constant temperature conditions.

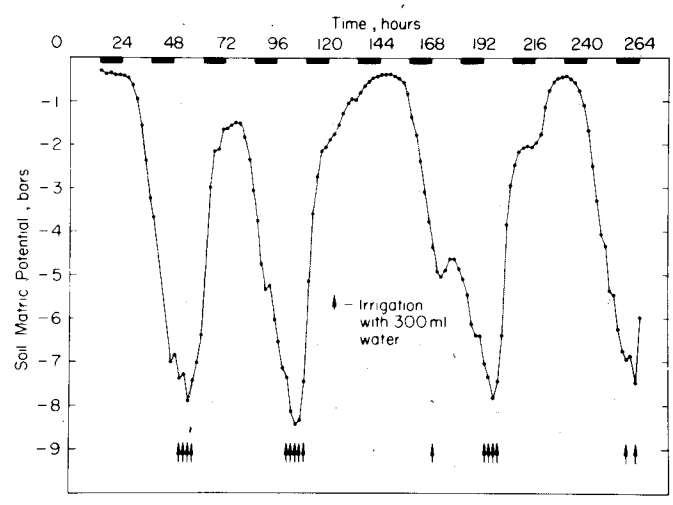

FIG. 5 Soil matric potential measurements when the system irrigated at about –7.5 bars.

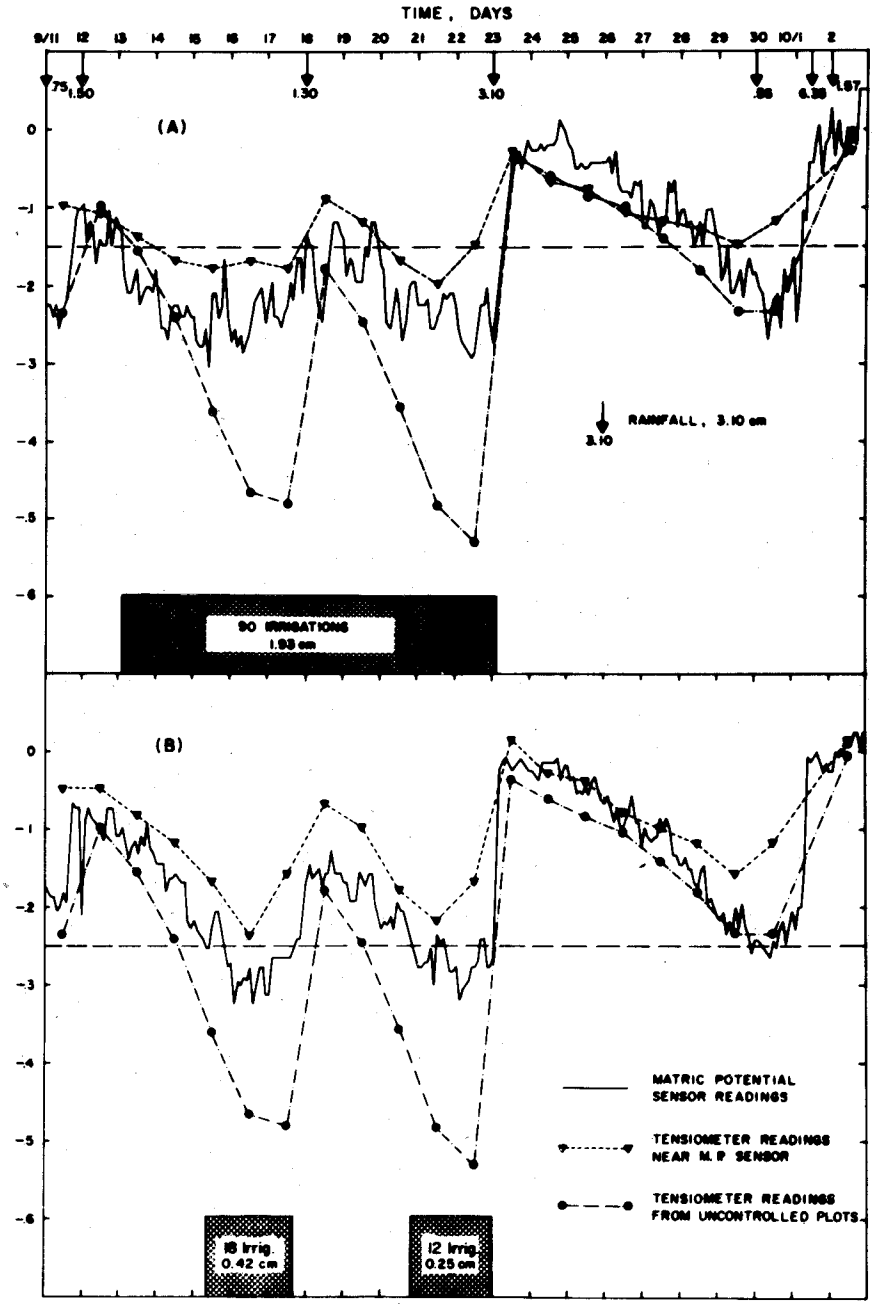

FIG. 6 Field soil matric potential measurements when the system irrigated at -0.15 (upper) and -0.25 bar (lower).

Data from the field tests are presented in Fig. 6. Part A of the figure shows data from the matric potential sensor and the tensiometer for the plot irrigated automatically when the soil matric potential fell below −0.15 bars. Because of ample rainfall, irrigations were required only between September 13 and September 23. During that period, 90 irrigations, totaling 1.93 cm of water, were applied to the sensor controlled plot. The mean daily tensiometer readings recorded at 4:00 p.m. from the four nonirrigated plots are also shown for comparison. The mean and standard deviations of the soil matric potential measurements obtained every 2 hr during the period of irrigation control were -0.21 ±0.05 bar. During the same period, the corresponding value of the soil matric potential measured with the tensiometer installed at the same depth was −0.15 ±0.03 bar, verifying the precision of irrigation control obtained with the sensor.

Part B of Fig. 6 gives data for the plot irrigated at a soil matric potential of −0.25 bar. The lower control point required only 30 irrigations during the September 13-23 period. Eighteen irrigations, totaling 0.42 cm of water, were applied between September 15 and 17, and 12 irrigations, totaling 0.25 cm of water, were applied between September 20 and 22. The mean daily tensiometer readings recorded at 4:00 p.m. from the four nonirrigated plots are shown also. The mean and standard deviations of the soil matric potential measurements obtained with the sensor every 2 hr during the irrigation control periods were −0.27 ±0.03 bar. During the same period, the corresponding values for the tensiometer were −0.22 ±0.04 bar.

SUMMARY AND CONCLUSIONS

The successful use of a soil matric potential sensor to control automatic irrigation has been demonstrated in both the laboratory and the field. The soil matric potential in a soil-plant system was controlled automatically at −0.15 ±0.01 bar in the laboratory when the system was subjected to variable temperatures. Irrigations were also controlled automatically at −7.6 ±0.5 bars in a soil-plant system.

In the field, the soil matric potential at the 15-cm depth was automatically controlled at −0.21 ±0.05 bar and −0.27 ±0.03 bar in plots planted to sweet corn. The fluctuation of the soil matric potential measured could have been further reduced by increasing the duration of water application at each irrigation. This in no way reflects on the capability of the sensor to control the irrigation system. The sensor called for irrigation when water was needed.

The basic advantages of the matric potential sensor method can be summarized as follows:

1 Soil matric potential measurements with the sensor are adaptable to automatic system control as well as to manual operation.

2 The soil matric potential can be measured and controlled throughout the normal desired range of soil matric potential by selection of appropriate porous block pore distribution characteristics.

References

1 Fischbach, P. E., T. L. Thompson and L. E. Stetson. 1970. Electric controls for automatic surface irrigation systems with reuse systems. TRANSACTIONS of the ASAE 13(2):286-288.

2 Hanan, J. J. and R. W. Langhans. 1964. Control of moisture content in greenhouse soils. Agron. J. 56:191-194.

3 Hoffman, G. J., C. J. Phene and S. L. Rawlins. 1969. Microchamber for studying plant response to environmental factors. TRANSACTIONS of the ASAE 12(4):598-601.

4 Painter, L. I. 1966. Method of subjecting growing plants to a continuous soil moisture stress. Agron. J. 58:459-460.

5 Phene, C. J., G. J. Hoffman and S. L. Rawlins. 1971. Measuring soil matric potential in situ by sensing heat dissipation within a porous body: I. Theory and sensor construction. Soil Sci. Soc. Amer. Proc. 35:27-33.

6 Phene, C. J., S. L. Rawlins and G. J. Hoffman. 1971. Measuring soil matric potential in situ by sensing heat dissipation within a porous body: II. Experimental results. Soil Sci. Soc. Amer. Proc. 35:225-229.

7 Waugh, D. L. and R. B. Corey. 1963. A moisture control apparatus for use in short term studies. Agron. J. 55:412-414.